EUROPEAN STANDARD **EN 1994-1-1**
NORME EUROPÉENNE
EUROPÄISCHE NORM

English version

EN 1994
Design of composite steel and concrete structures

Part 1.1
General rules and rules for buildings

CEN

European Committee for Standardization
Comité Européen de Normalisation
Europäisches Komitee für Normung

Final Document Stage 49 - Editorial Group
17. November 2004
(clean version)

This document (EN 1994-1-1:2004), Eurocode 4: Design of composite steel and concrete structures: Part 1-1 General rules and rules for buildings, has been prepared on behalf of Technical Committee CEN/TC 250 "Structural Eurocodes", the Secretariat of which is held by BSI.

This European Standard shall be given the status of a national standard, either by publication of an identical text or by endorsement, at the latest by **MM/YY**, and conflicting national standards shall be withdrawn at the latest by March 2010.

This document supersedes ENV 1994-1-1:1992.

CEN/TC 250 is responsible for all Structural Eurocodes.

According to the CEN/CENELEC Internal Regulations, the national standards organizations of the following countries are bound to implement this European Standard: Austria, Belgium, Cyprus, Czech Republic, Denmark, Estonia, Finland, France, Germany, Greece, Hungary, Iceland, Ireland, Italy, Latvia, Lithuania, Luxembourg, Malta, the Netherlands, Norway, Poland, Portugal, Slovakia, Slovenia, Spain, Sweden, Switzerland and the United Kingdom.

Central Secretariat: rue de Stassart 36, B-1050 Brussels

© CEN 2004 Copyright reserved to all CEN members

October 2004

Contents Page

Foreword…… 8

Section 1 General…… 12

1.1 Scope…… 12
1.1.1 Scope of Eurocode 4…… 12
1.1.2 Scope of Part 1.1 of Eurocode 4…… 12
1.2 Normative references…… 13
1.2.1 General reference standards…… 13
1.2.2 Other reference standards…… 13
1.3 Assumptions…… 14
1.4 Distinction between principles and application rules…… 14
1.5 Definitions…… 14
1.5.1 General…… 14
1.5.2 Additional terms and definitions used in this Standard…… 14
1.6 Symbols…… 15

Section 2 Basis of design…… 22

2.1 Requirements…… 22
2.2 Principles of limit state design…… 23
2.3 Basic variables…… 23
2.3.1 Actions and environmental influences…… 23
2.3.2 Material and product properties…… 23
2.3.3 Classification of actions…… 23
2.4 Verification by the partial factor method…… 23
2.4.1 Design values…… 23
2.4.1.1 Design values of actions…… 23
2.4.1.2 Design values of material or product properties…… 23
2.4.1.3 Design values of geometrical data…… 24
2.4.1.4 Design resistances …… 24
2.4.2 Combination of actions…… 24
2.4.3 Verification of static equilibrium (EQU)…… 24

Section 3 Materials…… 24

3.1 Concrete…… 24
3.2 Reinforcing steel…… 25
3.3 Structural steel…… 25
3.4 Connecting devices…… 25
3.4.1 General…… 25
3.4.2 Headed stud shear connectors…… 25
3.5 Profiled steel sheeting for composite slabs in buildings…… 25

Section 4 Durability…… 25

4.1 General…… 25
4.2 Profiled steel sheeting for composite slabs in buildings…… 26

Section 5 Structural analysis……... 26

5.1 Structural modelling for analysis…….. 26
5.1.1 Structural modelling and basic assumptions…….. 26
5.1.2 Joint modelling…… 26
5.1.3 Ground-structure interaction…….. 26
5.2 Structural stability……. 27
5.2.1 Effects of deformed geometry of the structure…….. 27
5.2.2 Methods of analysis for buildings…….. 27
5.3 Imperfections……. 28
5.3.1 Basis…… 28
5.3.2 Imperfections in buildings…… 28
5.3.2.1 General……. 28
5.3.2.2 Global imperfections…… 29
5.3.2.3 Member imperfections……. 29
5.4 Calculation of action effects…… 29
5.4.1 Methods of global analysis…….. 29
5.4.1.1 General…….. 29
5.4.1.2 Effective width of flanges for shear lag…… 29
5.4.2 Linear elastic analysis…….. 30
5.4.2.1 General……. 30
5.4.2.2 Creep and shrinkage…… 31
5.4.2.3 Effects of cracking of concrete……. 32
5.4.2.4 Stages and sequence of construction…… 33
5.4.2.5 Temperature effects…….. 33
5.4.2.6 Pre-stressing by controlled imposed deformations……33
5.4.3 Non-linear global analysis……. 33
5.4.4 Linear elastic analysis with limited redistribution for buildings……. 34
5.4.5 Rigid plastic global analysis for buildings…….. 35
5.5 Classification of cross-sections…….. 36
5.5.1 General…… 36
5.5.2 Classification of composite sections without concrete encasement…… 37
5.5.3 Classification of composite sections for buildings with concrete encasement……. 37

Section 6 Ultimate limit states…… 38

6.1 Beams……. 38
6.1.1 Beams for buildings……. 38
6.1.2 Effective width for verification of cross-sections…… 40
6.2 Resistances of cross-sections of beams……40
6.2.1 Bending resistance……. 40
6.2.1.1 General…… 40
6.2.1.2 Plastic resistance moment $M_{pl,Rd}$ of a composite cross-section……. 40
6.2.1.3 Plastic resistance moment of sections with partial shear connection in buildings…… 42
6.2.1.4 Non-linear resistance to bending……. 43
6.2.1.5 Elastic resistance to bending…… 44
6.2.2 Resistance to vertical shear……. 45
6.2.2.1 Scope……. 45
6.2.2.2 Plastic resistance to vertical shear……. 45

6.2.2.3 Shear buckling resistance…… 45
6.2.2.4 Bending and vertical shear…… 45
6.3 Resistance of cross-sections of beams for buildings with partial encasement…… 46
6.3.1 Scope……46
6.3.2 Bending resistance…… 46
6.3.3 Resistance to vertical shear……..47
6.3.4 Bending and vertical shear…… 48
6.4 Lateral-torsional buckling of composite beams……..48
6.4.1 General……48
6.4.2 Verification of lateral-torsional buckling of continuous composite beams with cross-sections in Class 1, 2 and 3 for buildings…… 49
6.4.3 Simplified verification for buildings without direct calculation…… 51
6.5 Transverse forces on webs…… 52
6.5.1 General…… 52
6.5.2 Flange-induced buckling of webs…… 52
6.6 Shear connection…… 52
6.6.1 General…… 52
6.6.1.1 Basis of design……..52
6.6.1.2 Limitation on the use of partial shear connection in beams for buildings……..53
6.6.1.3 Spacing of shear connectors in beams for buildings…… 54
6.6.2 Longitudinal shear force in beams for buildings……..55
6.6.2.1 Beams in which non-linear or elastic theory is used for resistances of one or more cross-sections……..55
6.6.2.2 Beams in which plastic theory is used for resistance of cross-sections…… 55
6.6.3 Headed stud connectors in solid slabs and concrete encasement……55
6.6.3.1 Design resistance…… 55
6.6.3.2 Influence of tension on shear resistance…….. 56
6.6.4 Design resistance of headed studs used with profiled steel sheeting in buildings…… 56
6.6.4.1 Sheeting with ribs parallel to the supporting beams……56
6.6.4.2 Sheeting with ribs transverse to the supporting beams……57
6.6.4.3 Biaxial loading of shear connectors……..58
6.6.5 Detailing of the shear connection and influence of execution…… 58
6.6.5.1 Resistance to separation…….. 58
6.6.5.2 Cover and concreting for buildings……. 58
6.6.5.3 Local reinforcement in the slab…… 59
6.6.5.4 Haunches other than formed by profiled steel sheeting……59
6.6.5.5 Spacing of connectors……. 60
6.6.5.6 Dimensions of the steel flange…… 60
6.6.5.7 Headed stud connectors…… 60
6.6.5.8 Headed studs used with profiled steel sheeting in buildings…… 61
6.6.6 Longitudinal shear in concrete slabs…….. 61
6.6.6.1 General…… 61
6.6.6.2 Design resistance to longitudinal shear…… 61
6.6.6.3 Minimum transverse reinforcement…… 62
6.6.6.4 Longitudinal shear and transverse reinforcement in beams for buildings…… 62

6.7 Composite columns and composite compression members…….. 63
6.7.1 General…….. 63
6.7.2 General method of design ……. 65
6.7.3 Simplified method of design……. 66
6.7.3.1 General and scope…… 66
6.7.3.2 Resistance of cross-sections…….. 67
6.7.3.3 Effective flexural stiffness, steel contribution ratio and relative slenderness…… 69
6.7.3.4 Methods of analysis and member imperfections…….. 70
6.7.3.5 Resistance of members in axial compression…… 70
6.7.3.6 Resistance of members in combined compression and uniaxial bending……71
6.7.3.7 Combined compression and biaxial bending……73
6.7.4 Shear connection and load introduction……74
6.7.4.1 General…… 74
6.7.4.2 Load introduction…….. 74
6.7.4.3 Longitudinal shear outside the areas of load introduction……77
6.7.5 Detailing Provisions……..76
6.7.5.1 Concrete cover of steel profiles and reinforcement……78
6.7.5.2 Longitudinal and transverse reinforcement……78
6.8 Fatigue……..78
6.8.1 General……. 78
6.8.2 Partial factors for fatigue assessment for buildings…….. 79
6.8.3 Fatigue strength……79
6.8.4 Internal forces and fatigue loadings……..80
6.8.5 Stresses ……80
6.8.5.1 General…… 80
6.8.5.2 Concrete…… 80
6.8.5.3 Structural steel…….. 80
6.8.5.4 Reinforcement…….. 81
6.8.5.5 Shear connection……81
6.8.6 Stress ranges…… 82
6.8.6.1 Structural steel and reinforcement…… 82
6.8.6.2 Shear connection…… 82
6.8.7 Fatigue assessment based on nominal stress ranges…… 83
6.8.7.1 Structural steel, reinforcement, and concrete…… 83
6.8.7.2 Shear connection…… 83

Section 7 Serviceability limit states…… 84

7.1 General…… 84
7.2 Stresses…… 84
7.2.1 General…… 84
7.2.2 Stress limitation for buildings……. 85
7.3 Deformations in buildings…….. 85
7.3.1 Deflections……85
7.3.2 Vibration…….. 86
7.4 Cracking of concrete……86
7.4.1 General…… 86
7.4.2 Minimum reinforcement…….. 87
7.4.3 Control of cracking due to direct loading…… 88

Section 8 Composite joints in frames for buildings…… 89

8.1 Scope…….. 89
8.2 Analysis, modelling and classification…… 90
8.2.1 General…… 90
8.2.2 Elastic global analysis……. 90
8.2.3 Classification of joints……90
8.3 Design methods……91
8.3.1 Basis and scope……91
8.3.2 Resistance…… 91
8.3.3 Rotational stiffness…….. 91
8.3.4 Rotation capacity……. 91
8.4 Resistance of components…….. 92
8.4.1 Scope…… 92
8.4.2 Basic joint components…… 92
8.4.2.1 Longitudinal steel reinforcement in tension……. 92
8.4.2.2 Steel contact plate in compression…… 92
8.4.3 Column web in transverse compression……93
8.4.4 Reinforced components…… 93
8.4.4.1 Column web panel in shear…….. 93
8.4.4.2 Column web in compression …… 93

Section 9 Composite slabs with profiled steel sheeting for buildings……. 94

9.1 General…… 94
9.1.1 Scope…… 94
9.1.2 Definitions…… 95
9.1.2.1 Types of shear connection…… 95
9.1.2.2 Full shear connection am partial shear connection……95
9.2 Detailing provisions……96
9.2.1 Slab thickness and reinforcement……96
9.2.2 Aggregate……. 97
9.2.3 Bearing requirements……97
9.3 Actions and action effects……97
9.3.1 Design situations…….. 97
9.3.2 Actions for profiled steel sheeting as shuttering……. 98
9.3.3 Actions for composite slab……. 98
9.4 Analysis for internal forces and moments…….. 98
9.4.1 Profiled steel sheeting as shuttering…… 98
9.4.2 Analysis of composite slab……. 98
9.4.3 Effective width of composite slab for concentrated point and line loads…… 99
9.5 Verification of profiled steel sheeting as shuttering for ultimate limit states…….. 100
9.6 Verification of profiled steel sheeting as shuttering for serviceability limit states……100
9.7 Verification of composite slabs for ultimate limit states……100
9.7.1 Design criterion…… 100
9.7.2 Flexure…… 101
9.7.3 Longitudinal shear for slabs without end anchorage…… 102
9.7.4 Longitudinal shear for slabs with end anchorage……104

9.7.5 Vertical shear…….. 104
9.7.6 Punching shear…… 104
9.8 Verification of composite slabs for serviceability limit states…… 104
9.8.1 Control of cracking of concrete…… 104
9.8.2 Deflection…… 105

Annex A (Informative) Stiffness of joint components in buildings…… 106

A.1 Scope…….. 106
A.2 Stiffness coefficients…… 106
A.2.1 Basic joint components…… 106
A.2.1.1 Longitudinal steel reinforcement in tension……. 106
A.2.1.2 Steel contact plate in compression…… 106
A.2.2 Other components in composite joints…… 108
A.2.2.1 Column web panel in shear……. 108
A.2.2.2 Column web in transverse compression…….. 108
A.2.3 Reinforced components…….. 108
A.2.3.1 Column web panel in shear…… 108
A.2.3.2 Column web in transverse compression……. 108
A.3 Deformation of the shear connection…… 109

Annex B (Informative) Standard tests…….. 110

B.1 General…….. 110
B.2 Tests on shear connectors……. 110
B.2.1 General…….. 110
B.2.2 Testing arrangements…… 110
B.2.3 Preparation of specimens…… 111
B.2.4 Testing procedure…….. 112
B.2.5 Test evaluation……. 112
B.3 Testing of composite floor slabs……. 113
B.3.1 General…… 113
B.3.2 Testing arrangement……. 114
B.3.3 Preparation of specimens……. 115
B.3.4 Test loading procedure……. 115
B.3.5 Determination of design values for *m* and *k*…… 116
B.3.6 Determination of the design values for $\tau_{u,Rd}$…… 117

Annex C (Informative) Shrinkage of concrete for composite structures for buildings…… 118

Bibliography……..118

Foreword

This document (EN 1994-1-1:2004), Eurocode 4: Design of composite steel and concrete structures: Part 1-1 General rules and rules for buildings, has been prepared on behalf of Technical Committee CEN/TC 250 "Structural Eurocodes", the Secretariat of which is held by BSI.

This European Standard shall be given the status of a national standard, either by publication of an identical text or by endorsement, at the latest by MM/YY, and conflicting national standards shall be withdrawn at the latest by March 2010.

This document supersedes ENV 1994-1-1:1992.

CEN/TC 250 is responsible for all Structural Eurocodes.

According to the CEN/CENELEC Internal Regulations, the national standards organizations of the following countries are bound to implement this European Standard: Austria, Belgium, Cyprus, Czech Republic, Denmark, Estonia, Finland, France, Germany, Greece, Hungary, Iceland, Ireland, Italy, Latvia, Lithuania, Luxembourg, Malta, the Netherlands, Norway, Poland, Portugal, Slovakia, Slovenia, Spain, Sweden, Switzerland and the United Kingdom.

Background of the Eurocode programme

In 1975, the Commission of the European Community decided on an action programme in the field of construction, based on article 95 of the Treaty. The objective of the programme was the elimination of technical obstacles to trade and the harmonisation of technical specifications.

Within this action programme, the Commission took the initiative to establish a set of harmonised technical rules for the design of construction works which, in a first stage, would serve as an alternative to the national rules in force in the Member States and, ultimately, would replace them.

For fifteen years, the Commission, with the help of a Steering Committee with Representatives of Member States, conducted the development of the Eurocodes programme, which led to the first generation of European codes in the 1980s.

In 1989, the Commission and the Member States of the EU and EFTA decided, on the basis of an agreement[1] between the Commission and CEN, to transfer the preparation and the publication of the Eurocodes to CEN through a series of Mandates, in order to provide them with a future status of European Standard (EN). This links *de facto* the Eurocodes with the provisions of all the Council's Directives and/or Commission's Decisions dealing with European standards (*e.g.* the Council Directive 89/106/EEC on construction products - CPD - and Council Directives 93/37/EEC, 92/50/EEC and 89/440/EEC on public works and services and equivalent EFTA Directives initiated in pursuit of setting up the internal market).

The Structural Eurocode programme comprises the following standards generally consisting of a number of Parts:

[1] Agreement between the Commission of the European Communities and the European Committee for Standardisation (CEN) concerning the work on EUROCODES for the design of building and civil engineering works (BC/CEN/03/89).

EN 1990	Eurocode :	Basis of Structural Design
EN 1991	Eurocode 1:	Actions on structures
EN 1992	Eurocode 2:	Design of concrete structures
EN 1993	Eurocode 3:	Design of steel structures
EN 1994	Eurocode 4:	Design of composite steel and concrete structures
EN 1995	Eurocode 5:	Design of timber structures
EN 1996	Eurocode 6:	Design of masonry structures
EN 1997	Eurocode 7:	Geotechnical design
EN 1998	Eurocode 8:	Design of structures for earthquake resistance
EN 1999	Eurocode 9:	Design of aluminium structures

Eurocode standards recognise the responsibility of regulatory authorities in each Member State and have safeguarded their right to determine values related to regulatory safety matters at national level where these continue to vary from State to State.

Status and field of application of Eurocodes

The Member States of the EU and EFTA recognise that Eurocodes serve as reference documents for the following purposes:

– as a means to prove compliance of building and civil engineering works with the essential requirements of Council Directive 89/106/EEC, particularly Essential Requirement N°1 – Mechanical resistance and stability – and Essential Requirement N°2 – Safety in case of fire ;

– as a basis for specifying contracts for construction works and related engineering services ;

– as a framework for drawing up harmonised technical specifications for construction products (ENs and ETAs)

The Eurocodes, as far as they concern the construction works themselves, have a direct relationship with the Interpretative Documents[2] referred to in Article 12 of the CPD, although they are of a different nature from harmonised product standards[3]. Therefore, technical aspects arising from the Eurocodes work need to be adequately considered by CEN Technical Committees and/or EOTA Working Groups working on product standards with a view to achieving full compatibility of these technical specifications with the Eurocodes.

The Eurocode standards provide common structural design rules for everyday use for the design of whole structures and component products of both a traditional and an innovative nature. Unusual forms of construction or design conditions are not specifically covered and additional expert consideration will be required by the designer in such cases.

[2] According to Art. 3.3 of the CPD, the essential requirements (ERs) shall be given concrete form in interpretative documents for the creation of the necessary links between the essential requirements and the mandates for harmonised ENs and ETAGs/ETAs.

[3] According to Art. 12 of the CPD the interpretative documents shall :

a) give concrete form to the essential requirements by harmonising the terminology and the technical bases and indicating classes or levels for each requirement where necessary ;

b) indicate methods of correlating these classes or levels of requirement with the technical specifications, *e.g.* methods of calculation and of proof, technical rules for project design, etc. ;

c) serve as a reference for the establishment of harmonised standards and guidelines for European technical approvals.

The Eurocodes, *de facto*, play a similar role in the field of the ER 1 and a part of ER 2.

National Standards implementing Eurocodes

The National Standards implementing Eurocodes will comprise the full text of the Eurocode (including any annexes), as published by CEN, which may be preceded by a National title page and National foreword, and may be followed by a National annex.

The National annex may only contain information on those parameters which are left open in the Eurocode for national choice, known as Nationally Determined Parameters, to be used for the design of buildings and civil engineering works to be constructed in the country concerned, *i.e.*:

- values and/or classes where alternatives are given in the Eurocode,
- values to be used where a symbol only is given in the Eurocode,
- country specific data (geographical, climatic, etc.), e.g. snow map,
- the procedure to be used where alternative procedures are given in the Eurocode.

It may also contain
- decisions on the use of informative annexes, and
- references to non-contradictory complementary information to assist the user to apply the Eurocode.

Links between Eurocodes and harmonised technical specifications (ENs and ETAs) for products

There is a need for consistency between the harmonised technical specifications for construction products and the technical rules for works[4]. Furthermore, all the information accompanying the CE Marking of the construction products which refer to Eurocodes shall clearly mention which Nationally Determined Parameters have been taken into account.

Additional information specific to EN 1994-1-1

EN 1994-1-1 describes the Principles and requirements for safety, serviceability and durability of composite steel and concrete structures, together with specific provisions for buildings. It is based on the limit state concept used in conjunction with a partial factor method.

For the design of new structures, EN 1994-1-1 is intended to be used, for direct application, together with other Parts of EN 1994, Eurocodes EN 1990 to 1993 and Eurocodes EN 1997 and 1998.

EN 1994-1-1 also serves as a reference document for other CEN TCs concerning structural matters.

EN 1994-1-1 is intended for use by:
– committees drafting other standards for structural design and related product, testing and execution standards;
– clients (e.g. for the formulation of their specific requirements on reliability levels and durability);
– designers and constructors;
– relevant authorities.

[4] see Art.3.3 and Art.12 of the CPD, as well as clauses 4.2, 4.3.1, 4.3.2 and 5.2 of ID 1.

Numerical values for partial factors and other reliability parameters are recommended as basic values that provide an acceptable level of reliability. They have been selected assuming that an appropriate level of workmanship and of quality management applies. When EN 1994-1-1 is used as a base document by other CEN/TCs the same values need to be taken.

National annex for EN 1994-1-1

This standard gives values with notes indicating where national choices may have to be made. Therefore the National Standard implementing EN 1994-1-1 should have a National annex containing all Nationally Determined Parameters to be used for the design of buildings and civil engineering works to be constructed in the relevant country.

National choice is allowed in EN 1994-1-1 through the following clauses:

- 2.4.1.1(1)
- 2.4.1.2(5)
- 2.4.1.2(6)
- 2.4.1.2(7)
- 3.1(4)
- 3.5(2)
- 6.4.3(1)(h)
- 6.6.3.1(1)
- 6.6.3.1(3)
- 6.6.4.1(3)
- 6.8.2(1)
- 6.8.2(2)
- 9.1.1(2)
- 9.6(2)
- 9.7.3(4)
- 9.7.3(8)
- 9.7.3(9)
- B.2.5(1)
- B.3.6(5)

Section 1 General

1.1 Scope

1.1.1 Scope of Eurocode 4

(1) Eurocode 4 applies to the design of composite structures and members for buildings and civil engineering works. It complies with the principles and requirements for the safety and serviceability of structures, the basis of their design and verification that are given in EN 1990 – Basis of structural design.

(2) Eurocode 4 is concerned only with requirements for resistance, serviceability, durability and fire resistance of composite structures. Other requirements, e.g. concerning thermal or sound insulation, are not considered.

(3) Eurocode 4 is intended to be used in conjunction with:

EN 1990 Eurocode: Basis of structural design

EN 1991 Eurocode 1: Actions on structures

ENs, hENs, ETAGs and ETAs for construction products relevant for composite structures

EN 1090 Execution of steel structures and aluminium structures

EN 13670 Execution of concrete structures

EN 1992 Eurocode 2: Design of concrete structures

EN 1993 Eurocode 3: Design of steel structures

EN 1997 Eurocode 7: Geotechnical design

EN 1998 Eurocode 8: Design of structures for earthquake resistance, when composite structures are built in seismic regions.

(4) Eurocode 4 is subdivided in various parts:

Part 1-1: General rules and rules for buildings

Part 1-2: Structural fire design

Part 2: Bridges.

1.1.2 Scope of Part 1-1 of Eurocode 4

(1) Part 1-1 of Eurocode 4 gives a general basis for the design of composite structures together with specific rules for buildings.

(2) The following subjects are dealt with in Part 1-1:

Section 1: General
Section 2: Basis of design
Section 3: Materials
Section 4: Durability
Section 5: Structural analysis
Section 6: Ultimate limit states
Section 7: Serviceability limit states
Section 8: Composite joints in frames for buildings
Section 9: Composite slabs with profiled steel sheeting for buildings

1.2 Normative references

The following normative documents contain provisions which, through references in this text, constitute provisions of this European standard. For dated references, subsequent amendments to or revisions of any of these publications do not apply. However, parties to agreements based on this European standard are encouraged to investigate the possibility of applying the most recent editions of the normative documents indicated below. For undated references the latest edition of the normative document referred to applies.

1.2.1 General reference standards

EN 1090-2 [1]	Execution of steel structures and aluminium structures - Technical rules for the execution of steel structures
EN 1990: 2002	Basis of structural design.

1.2.2 Other reference standards

EN 1992-1-1 [1]	Eurocode 2: Design of concrete structures: General rules and rules for buildings
EN 1993-1-1 [1]	Eurocode 3: Design of steel structures: General rules and rules for buildings
EN 1993-1-3 [1]	Eurocode 3: Design of steel structures: Cold-formed thin gauge members and sheeting
EN 1993-1-5 [1]	Eurocode 3: Design of steel structures: Plated structural elements
EN 1993-1-8 [1]	Eurocode 3: Design of steel structures: Design of joints
EN 1993-1-9 [1]	Eurocode 3: Design of steel structures: Fatigue strength of steel structures
EN 10025-1: 2002	Hot-rolled products of structural steels: General delivery conditions
EN 10025-2: 2002	Hot-rolled products of structural steels: Technical delivery conditions for non-alloy structural steels
EN 10025-3: 2002	Hot-rolled products of structural steels: Technical delivery conditions for normalized/normalized rolled weldable fine grain structural steels
EN 10025-4: 2002	Hot-rolled products of structural steels: Technical delivery conditions for thermomechanical rolled weldable fine grain structural steels
EN 10025-5: 2002	Hot-rolled products of structural steels: Technical delivery conditions for structural steels with improved atmospheric corrosion resistance

[1] To be published

EN 10025-6: 2002	Hot-rolled products of structural steels: Technical delivery conditions for flat products of high yield strength structural steels in the quenched and tempered condition
EN 10147: 2000	Continuously hot-dip zinc coated structural steels strip and sheet: Technical delivery conditions
EN 10149-2: 1995	Hot-rolled flat products made of high yield strength steels for cold-forming: Delivery conditions for thermomechanically rolled steels
EN 10149-3: 1995	Hot-rolled flat products made of high yield strength steels for cold-forming: Delivery conditions for normalised or normalised rolled steels

1.3 Assumptions

(1) In addition to the general assumptions of EN 1990 the following assumptions apply:

– those given in clauses 1.3 of EN1992-1-1 and EN1993-1-1.

1.4 Distinction between principles and application rules

(1) The rules in EN 1990, 1.4 apply.

1.5 Definitions

1.5.1 General

(1) The terms and definitions given in EN 1990, 1.5, EN 1992-1-1, 1.5 and EN 1993-1-1, 1.5 apply.

1.5.2 Additional terms and definitions used in this Standard

1.5.2.1 Composite member

a structural member with components of concrete and of structural or cold-formed steel, interconnected by shear connection so as to limit the longitudinal slip between concrete and steel and the separation of one component from the other

1.5.2.2 Shear connection

an interconnection between the concrete and steel components of a composite member that has sufficient strength and stiffness to enable the two components to be designed as parts of a single structural member

1.5.2.3 Composite behaviour

behaviour which occurs after the shear connection has become effective due to hardening of concrete

1.5.2.4 Composite beam

a composite member subjected mainly to bending

1.5.2.5 Composite column

a composite member subjected mainly to compression or to compression and bending

1.5.2.6 Composite slab
a slab in which profiled steel sheets are used initially as permanent shuttering and subsequently combine structurally with the hardened concrete and act as tensile reinforcement in the finished floor

1.5.2.7 Composite frame
a framed structure in which some or all of the elements are composite members and most of the remainder are structural steel members

1.5.2.8 Composite joint
a joint between a composite member and another composite, steel or reinforced concrete member, in which reinforcement is taken into account in design for the resistance and the stiffness of the joint

1.5.2.9 Propped structure or member
a structure or member where the weight of concrete elements is applied to the steel elements which are supported in the span, or is carried independently until the concrete elements are able to resist stresses

1.5.2.10 Un-propped structure or member
a structure or member in which the weight of concrete elements is applied to steel elements which are unsupported in the span

1.5.2.11 Un-cracked flexural stiffness
the stiffness $E_a I_1$ of a cross-section of a composite member where I_1 is the second moment of area of the effective equivalent steel section calculated assuming that concrete in tension is un-cracked

1.5.2.12 Cracked flexural stiffness
the stiffness $E_a I_2$ of a cross-section of a composite member where I_2 is the second moment of area of the effective equivalent steel section calculated neglecting concrete in tension but including reinforcement

1.5.2.13 Prestress
the process of applying compressive stresses to the concrete part of a composite member, achieved by tendons or by controlled imposed deformations

1.6 Symbols

For the purpose of this Standard the following symbols apply.

Latin upper case letters

A	Cross-sectional area of the effective composite section neglecting concrete in tension
A_a	Cross-sectional area of the structural steel section
A_b	Cross-sectional area of bottom transverse reinforcement
A_{bh}	Cross-sectional area of bottom transverse reinforcement in a haunch
A_c	Cross-sectional area of concrete
A_{ct}	Cross-sectional area of the tensile zone of the concrete
A_{fc}	Cross-sectional area of the compression flange
A_p	Cross-sectional area of profiled steel sheeting

A_{pe}	Effective cross-sectional area of profiled steel sheeting
A_s	Cross-sectional area of reinforcement
A_{sf}	Cross-sectional area of transverse reinforcement
$A_{s,r}$	Cross-sectional area of reinforcement in row *r*
A_t	Cross-sectional area of top transverse reinforcement
A_v	Shear area of a structural steel section
A_1	Loaded area under the gusset plate
E_a	Modulus of elasticity of structural steel
$E_{c,eff}$	Effective modulus of elasticity for concrete
E_{cm}	Secant modulus of elasticity of concrete
E_s	Design value of modulus of elasticity of reinforcing steel
$(EI)_{eff}$	Effective flexural stiffness for calculation of relative slenderness
$(EI)_{eff,II}$	Effective flexural stiffness for use in second-order analysis
$(EI)_2$	Cracked flexural stiffness per unit width of the concrete or composite slab
$F_{c,wc,c,Rd}$	Design value of the resistance to transverse compression of the concrete encasement to a column web
F_ℓ	Design longitudinal force per stud
F_t	Design transverse force per stud
F_{ten}	Design tensile force per stud
G_a	Shear modulus of structural steel
G_c	Shear modulus of concrete
I	Second moment of area of the effective composite section neglecting concrete in tension
I_a	Second moment of area of the structural steel section
I_{at}	St. Venant torsion constant of the structural steel section
I_c	Second moment of area of the un-cracked concrete section
I_{ct}	St. Venant torsion constant of the un-cracked concrete encasement
I_s	Second moment of area of the steel reinforcement
I_1	Second moment of area of the effective equivalent steel section assuming that the concrete in tension is un-cracked
I_2	Second moment of area of the effective equivalent steel section neglecting concrete in tension but including reinforcement
K_e , $K_{e,II}$	Correction factors to be used in the design of composite columns
K_{sc}	Stiffness related to the shear connection
K_β	Parameter
K_0	Calibration factor to be used in the design of composite columns
L	Length; span; effective span
L_e	Equivalent span
L_i	Span
L_o	Length of overhang
L_p	Distance from centre of a concentrated load to the nearest support
L_s	Shear span
L_x	Distance from a cross-section to the nearest support
M	Bending moment
M_a	Contribution of the structural steel section to the design plastic resistance moment of the composite section
$M_{a,Ed}$	Design bending moment applied to the structural steel section
$M_{b,Rd}$	Design value of the buckling resistance moment of a composite beam
$M_{c,Ed}$	The part of the design bending moment applied to the composite section
M_{cr}	Elastic critical moment for lateral-torsional buckling of a composite beam

M_{Ed}	Design bending moment
$M_{Ed,i}$	Design bending moment applied to a composite joint *i*
$M_{Ed,max,f}$	Maximum bending moment or internal force due to fatigue loading
$M_{Ed,min,f}$	Minimum bending moment due to fatigue loading
$M_{el,Rd}$	Design value of the elastic resistance moment of the composite section
$M_{max,Rd}$	Maximum design value of the resistance moment in the presence of a compressive normal force
M_{pa}	Design value of the plastic resistance moment of the effective cross-section of the profiled steel sheeting
M_{perm}	Most adverse bending moment for the characteristic combination
$M_{pl,a,Rd}$	Design value of the plastic resistance moment of the structural steel section
$M_{pl,N,Rd}$	Design value of the plastic resistance moment of the composite section taking into account the compressive normal force
$M_{pl,Rd}$	Design value of the plastic resistance moment of the composite section with full shear connection
$M_{pl,y,Rd}$	Design value of the plastic resistance moment about the *y-y* axis of the composite section with full shear connection
$M_{pl,z,Rd}$	Design value of the plastic resistance moment about the *z-z* axis of the composite section with full shear connection
M_{pr}	Reduced plastic resistance moment of the profiled steel sheeting
M_{Rd}	Design value of the resistance moment of a composite section or joint
M_{Rk}	Characteristic value of the resistance moment of a composite section or joint
$M_{y,Ed}$	Design bending moment applied to the composite section about the *y-y* axis
$M_{z,Ed}$	Design bending moment applied to the composite section about the *z-z* axis
N	Compressive normal force; number of stress range cycles; number of shear connectors
N_a	Design value of the normal force in the structural steel section of a composite beam
N_c	Design value of the compressive normal force in the concrete flange
$N_{c,f}$	Design value of the compressive normal force in the concrete flange with full shear connection
$N_{c,el}$	Compressive normal force in the concrete flange corresponding to $M_{el,Rd}$
$N_{cr,eff}$	Elastic critical load of a composite column corresponding to an effective flexural stiffness
N_{cr}	Elastic critical normal force
N_{c1}	Design value of normal force calculated for load introduction
N_{Ed}	Design value of the compressive normal force
$N_{G,Ed}$	Design value of the part of the compressive normal force that is permanent
N_p	Design value of the plastic resistance of the profiled steel sheeting to normal force
$N_{pl,a}$	Design value of the plastic resistance of the structural steel section to normal force
$N_{pl,Rd}$	Design value of the plastic resistance of the composite section to compressive normal force
$N_{pl,Rk}$	Characteristic value of the plastic resistance of the composite section to compressive normal force
$N_{pm,Rd}$	Design value of the resistance of the concrete to compressive normal force
N_R	Number of stress-range cycles
N_s	Design value of the plastic resistance of the steel reinforcement to normal force
N_{sd}	Design value of the plastic resistance of the reinforcing steel to tensile normal force
$P_{\ell,Rd}$	Design value of the shear resistance of a single stud connector corresponding to F_ℓ
$P_{pb,Rd}$	Design value of the bearing resistance of a stud
P_{Rd}	Design value of the shear resistance of a single connector

P_{Rk} Characteristic value of the shear resistance of a single connector
$P_{t,Rd}$ Design value of the shear resistance of a single stud connector corresponding to F_t
R_{Ed} Design value of a support reaction
S_j Rotational stiffness of a joint
$S_{j,ini}$ Initial rotational stiffness of a joint
$V_{a,Ed}$ Design value of the shear force acting on the structural steel section
$V_{b,Rd}$ Design value of the shear buckling resistance of a steel web
$V_{c,Ed}$ Design value of the shear force acting on the reinforced concrete web encasement
V_{Ed} Design value of the shear force acting on the composite section
V_{ld} Design value of the resistance of the end anchorage
$V_{l,Rd}$ Design value of the resistance to shear
$V_{pl,Rd}$ Design value of the plastic resistance of the composite section to vertical shear
$V_{pl,a,Rd}$ Design value of the plastic resistance of the structural steel section to vertical shear
$V_{p,Rd}$ Design value of the resistance of a composite slab to punching shear
V_{Rd} Design value of the resistance of the composite section to vertical shear
V_t Support reaction
$V_{v,Rd}$ Design value of the resistance of a composite slab to vertical shear
$V_{wp,c,Rd}$ Design value of the shear resistance of the concrete encasement to a column web panel
W_t Measured failure load

Latin lower case letters

a Spacing between parallel beams; diameter or width; distance
b Width of the flange of a steel section; width of slab
b_b Width of the bottom of the concrete rib
b_c Width of the concrete encasement to a steel section
b_{eff} Total effective width
$b_{eff,1}$ Effective width at mid-span for a span supported at both ends
$b_{eff,2}$ Effective width at an internal support
$b_{eff,c,wc}$ Effective width of the column web in compression
b_{ei} Effective width of the concrete flange on each side of the web
b_{em} Effective width of a composite slab
b_f Width of the flange of a steel section
b_i Geometric width of the concrete flange on each side of the web
b_m Width of a composite slab over which a load is distributed
b_p Length of concentrated line load
b_r Width of rib of profiled steel sheeting
b_s Distance between centres of adjacent ribs of profiled steel sheeting
b_0 Distance between the centres of the outstand shear connectors; mean width of a concrete rib (minimum width for re-entrant sheeting profiles); width of haunch
c Width of the outstand of a steel flange; effective perimeter of reinforcing bar
c_y, c_z Thickness of concrete cover
d Clear depth of the web of the structural steel section; diameter of the shank of a stud connector; overall diameter of circular hollow steel section; minimum transverse dimension of a column
d_{do} Diameter of the weld collar to a stud connector
d_p Distance between the centroidal axis of the profiled steel sheeting and the extreme fibre of the composite slab in compression
d_s Distance between the steel reinforcement in tension to the extreme fibre of the composite slab in compression; distance between the longitudinal reinforcement in tension and the centroid of the beam's steel section

e	Eccentricity of loading; distance from the centroidal axis of profiled steel sheeting to the extreme fibre of the composite slab in tension
e_D	Edge distance
e_g	Gap between the reinforcement and the end plate in a composite column
e_p	Distance from the plastic neutral axis of profiled steel sheeting to the extreme fibre of the composite slab in tension
e_s	Distance from the steel reinforcement in tension to the extreme fibre of the composite slab in tension
f	Natural frequency
f_{cd}	Design value of the cylinder compressive strength of concrete
f_{ck}	Characteristic value of the cylinder compressive strength of concrete at 28 days
f_{cm}	Mean value of the measured cylinder compressive strength of concrete
$f_{ct,eff}$	Mean value of the effective tensile strength of the concrete
f_{ctm}	Mean value of the axial tensile strength of concrete
$f_{ct,0}$	Reference strength for concrete in tension
f_{lctm}	Mean value of the axial tensile strength of lightweight concrete
f_{sd}	Design value of the yield strength of reinforcing steel
f_{sk}	Characteristic value of the yield strength of reinforcing steel
f_u	Specified ultimate tensile strength
f_{ut}	Actual ultimate tensile strength in a test specimen
f_y	Nominal value of the yield strength of structural steel
f_{yd}	Design value of the yield strength of structural steel
$f_{yp,d}$	Design value of the yield strength of profiled steel sheeting
f_{ypm}	Mean value of the measured yield strength of profiled steel sheeting
f_1 , f_2	Reduction factors for bending moments at supports
h	Overall depth; thickness
h_a	Depth of the structural steel section
h_c	Depth of the concrete encasement to a steel section; thickness of the concrete flange; thickness of concrete above the main flat surface of the top of the ribs of the sheeting
h_f	Thickness of concrete flange; thickness of finishes
h_n	Position of neutral axis
h_p	Overall depth of the profiled steel sheeting excluding embossments
h_s	Depth between the centroids of the flanges of the structural steel section; distance between the longitudinal reinforcement in tension and the centre of compression
h_{sc}	Overall nominal height of a stud connector
h_t	Overall thickness of test specimen
k	Amplification factor for second-order effects; coefficient; empirical factor for design shear resistance
k_c	Coefficient
k_i	Stiffness coefficient
$k_{i,c}$	Addition to the stiffness coefficient k_i due to concrete encasement
k_ℓ	Reduction factor for resistance of a headed stud used with profiled steel sheeting parallel to the beam
k_s	Rotational stiffness; coefficient
k_{sc}	Stiffness of a shear connector
k_{slip}	Stiffness reduction factor due to deformation of the shear connection
$k_{s,r}$	Stiffness coefficient for a row r of longitudinal reinforcement in tension
k_t	Reduction factor for resistance of a headed stud used with profiled steel sheeting transverse to the beam

$k_{wc,c}$	Factor for the effect of longitudinal compressive stress on transverse resistance of a column web
k_{ϕ}	Parameter
k_1	Flexural stiffness of the cracked concrete or composite slab
k_2	Flexural stiffness of the web
ℓ	Length of the beam in hogging bending adjacent to the joint
l	Length of slab in standard push test
l_{bc} , l_{bs}	Bearing lengths
ℓ_0	Load introduction length
m	Slope of fatigue strength curve; empirical factor for design shear resistance
n	Modular ratio; number of shear connectors
n_f	Number of connectors for full shear connection
n_L	Modular ratio depending on the type of loading
n_r	Number of stud connectors in one rib
n_0	Modular ratio for short-term loading
r	Ratio of end moments
s	Longitudinal spacing centre-to-centre of the stud shear connectors; slip
s_t	Transverse spacing centre-to-centre of the stud shear connectors
t	Age; thickness
t_e	Thickness of end plate
$t_{eff,c}$	Effective length of concrete
t_f	Thickness of a flange of the structural steel section
t_s	Thickness of a stiffener
t_w	Thickness of the web of the structural steel section
t_{wc}	Thickness of the web of the structural steel column section
t_0	Age at loading
v_{Ed}	Design longitudinal shear stress
w_k	Design value of crack width
x_{pl}	Distance between the plastic neutral axis and the extreme fibre of the concrete slab in compression
y	Cross-section axis parallel to the flanges
z	Cross-section axis perpendicular to the flanges; lever arm
z_0	Vertical distance

Greek upper case letters

$\Delta\sigma$	Stress range
$\Delta\sigma_c$	Reference value of the fatigue strength at 2 million cycles
$\Delta\sigma_E$	Equivalent constant amplitude stress range
$\Delta\sigma_{E,glob}$	Equivalent constant amplitude stress range due to global effects
$\Delta\sigma_{E,loc}$	Equivalent constant amplitude stress range due to local effects
$\Delta\sigma_{E,2}$	Equivalent constant amplitude stress range related to 2 million cycles
$\Delta\sigma_s$	Increase of stress in steel reinforcement due to tension stiffening of concrete
$\Delta\sigma_{s,equ}$	Damage equivalent stress range
$\Delta\tau$	Range of shear stress for fatigue loading
$\Delta\tau_c$	Reference value of the fatigue strength at 2 million cycles
$\Delta\tau_E$	Equivalent constant amplitude stress range
$\Delta\tau_{E,2}$	Equivalent constant amplitude range of shear stress related to 2 million cycles
$\Delta\tau_R$	Fatigue shear strength

Ψ	Coefficient

Greek lower case letters

α	Factor; parameter
α_{cr}	Factor by which the design loads would have to be increased to cause elastic instability
α_M	Coefficient related to bending of a composite column
$\alpha_{M,y}$, α_{Mz}	Coefficient related to bending of a composite column about the *y*-y axis and the *z-z* axis respectively
α_{st}	Ratio
β	Factor; transformation parameter
β_c , β_i	Parameters
γ_C	Partial factor for concrete
γ_F	Partial factor for actions, also accounting for model uncertainties and dimensional variations
γ_{Ff}	Partial factor for equivalent constant amplitude stress range
γ_M	Partial factor for a material property, also accounting for model uncertainties and dimensional variations
γ_{M0}	Partial factor for structural steel applied to resistance of cross-sections, see EN 1993-1-1, 6.1(1)
γ_{M1}	Partial factor for structural steel applied to resistance of members to instability assessed by member checks, see EN 1993-1-1, 6.1(1)
γ_{Mf}	Partial factor for fatigue strength
$\gamma_{Mf,s}$	Partial factor for fatigue strength of studs in shear
γ_P	Partial factor for pre-stressing action
γ_S	Partial factor for reinforcing steel
γ_V	Partial factor for design shear resistance of a headed stud
γ_{VS}	Partial factor for design shear resistance of a composite slab
δ	Factor; steel contribution ratio; central deflection
δ_{max}	Sagging vertical deflection
δ_s	Deflection of steel sheeting under its own weight plus the weight of wet concrete
$\delta_{s,max}$	Limiting value of δ_s
δ_u	Maximum slip measured in a test at the characteristic load level
δ_{uk}	Characteristic value of slip capacity
ε	$\sqrt{235/f_y}$, where f_y is in N/mm^2
η	Degree of shear connection; coefficient
η_a, η_{ao}	Factors related to the confinement of concrete
η_c, η_{co}, η_{cL}	Factors related to the confinement of concrete
θ	Angle
λ, λ_v	Damage equivalent factors
λ_{glob}, λ_{loc}	Damage equivalent factors for global effects and local effects, respectively
$\bar{\lambda}$	Relative slenderness
$\bar{\lambda}_{LT}$	Relative slenderness for lateral-torsional buckling
μ	Coefficient of friction; nominal factor
μ_d	Factor related to design for compression and uniaxial bending
μ_{dy} , μ_{dz}	Factor μ_d related to plane of bending

ν	Reduction factor to allow for the effect of longitudinal compression on resistance in shear; parameter related to deformation of the shear connection
ν_a	Poisson's ratio for structural steel
ξ	Parameter related to deformation of the shear connection
ρ	Parameter related to reduced design bending resistance accounting for vertical shear
ρ_s	Parameter; reinforcement ratio
$\sigma_{com,c,Ed}$	Longitudinal compressive stress in the encasement due to the design normal force
$\sigma_{c,Rd}$	Local design strength of concrete
σ_{ct}	Extreme fibre tensile stress in the concrete
$\sigma_{max,f}$	Maximum stress due to fatigue loading
$\sigma_{min,f}$	Minimum stress due to fatigue loading
$\sigma_{s,max,f}$	Stress in the reinforcement due to the bending moment $M_{Ed,max,f}$
$\sigma_{s,min,f,}$	Stress in the reinforcement due to the bending moment $M_{Ed,min,f}$
σ_s	Stress in the tension reinforcement
$\sigma_{s,max}$	Stress in the reinforcement due to the bending moment M_{max}
$\sigma_{s,max,0}$	Stress in the reinforcement due to the bending moment M_{max}, neglecting concrete in tension
$\sigma_{s,0}$	Stress in the tension reinforcement neglecting tension stiffening of concrete
τ_{Rd}	Design shear strength
τ_u	Value of longitudinal shear strength of a composite slab determined from testing
$\tau_{u,Rd}$	Design value of longitudinal shear strength of a composite slab
$\tau_{u,Rk}$	Characteristic value of longitudinal shear strength of a composite slab
ϕ	Diameter (size) of a steel reinforcing bar; damage equivalent impact factor
ϕ^*	Diameter (size) of a steel reinforcing bar
φ_t	Creep coefficient
$\varphi(t,t_0)$	Creep coefficient, defining creep between times t and t_0, related to elastic deformation at 28 days
χ	Reduction factor for flexural buckling
χ_{LT}	Reduction factor for lateral-torsional buckling
ψ_L	Creep multiplier

Section 2 Basis of design

2.1 Requirements

(1)P The design of composite structures shall be in accordance with the general rules given in EN 1990.

(2)P The supplementary provisions for composite structures given in this Section shall also be applied.

(3) The basic requirements of EN 1990, Section 2 are deemed be satisfied for composite structures when the following are applied together:

– limit state design in conjunction with the partial factor method in accordance with EN 1990,
– actions in accordance with EN 1991,
– combination of actions in accordance with EN 1990 and
– resistances, durability and serviceability in accordance with this Standard.

2.2 Principles of limit states design

(1)P For composite structures, relevant stages in the sequence of construction shall be considered.

2.3 Basic variables

2.3.1 Actions and environmental influences

(1) Actions to be used in design may be obtained from the relevant parts of EN 1991.

(2)P In verification for steel sheeting as shuttering, account shall be taken of the ponding effect (increased depth of concrete due to the deflection of the sheeting).

2.3.2 Material and product properties

(1) Unless otherwise given by Eurocode 4, actions caused by time-dependent behaviour of concrete should be obtained from EN 1992-1-1.

2.3.3 Classification of actions

(1)P The effects of shrinkage and creep of concrete and non-uniform changes of temperature result in internal forces in cross sections, and curvatures and longitudinal strains in members; the effects that occur in statically determinate structures, and in statically indeterminate structures when compatibility of the deformations is not considered, shall be classified as primary effects.

(2)P In statically indeterminate structures the primary effects of shrinkage, creep and temperature are associated with additional action effects, such that the total effects are compatible; these shall be classified as secondary effects and shall be considered as indirect actions.

2.4 Verification by the partial factor method

2.4.1 Design values

2.4.1.1 Design values of actions

(1) For pre-stress by controlled imposed deformations, e.g. by jacking at supports, the partial safety factor γ_P should be specified for ultimate limit states, taking into account favourable and unfavourable effects.

Note: Values for γ_P may be given in the National Annex. The recommended value for both favourable and unfavourable effects is 1,0.

2.4.1.2 Design values of material or product properties

(1)P Unless an upper estimate of strength is required, partial factors shall be applied to lower characteristic or nominal strengths.

(2)P For concrete, a partial factor γ_C shall be applied. The design compressive strength shall be given by:

$$f_{cd} = f_{ck} / \gamma_C \qquad (2.1)$$

where the characteristic value f_{ck} shall be obtained by reference to EN 1992-1-1, 3.1 for normal concrete and to EN 1992-1-1, 11.3 for lightweight concrete.

Note: The value for γ_C is that used in EN 1992-1-1.

(3)P For steel reinforcement, a partial factor γ_S shall be applied.

Note: The value for γ_S is that used in EN 1992-1-1.

(4)P For structural steel, steel sheeting and steel connecting devices, partial factors γ_M shall be applied. Unless otherwise stated, the partial factor for structural steel shall be taken as γ_{M0}.

Note: Values for γ_M are those given in EN 1993.

(5)P For shear connection, a partial factor γ_V shall be applied.

Note: The value for γ_V may be given in the National Annex. The recommended value for γ_V is 1,25.

(6)P For longitudinal shear in composite slabs for buildings, a partial factor γ_{VS} shall be applied.

Note: The value for γ_{VS} may be given in the National Annex. The recommended value for γ_{VS} is 1,25.

(7)P For fatigue verification of headed studs in buildings, partial factors γ_{Mf} and $\gamma_{Mf,s}$ shall be applied.

Note: The value for γ_{Mf} is that used the relevant Parts of EN 1993. The value for $\gamma_{Mf,s}$. may be given in the National Annex. The recommended value for $\gamma_{Mf,s}$ is 1,0.

2.4.1.3 Design values of geometrical data

(1) Geometrical data for cross-sections and systems may be taken from product standards hEN or drawings for the execution and treated as nominal values.

2.4.1.4 Design resistances

(1)P For composite structures, design resistances shall be determined in accordance with EN 1990, expression (6.6a) or expression (6.6c).

2.4.2 Combination of actions

(1) The general formats for combinations of actions are given in EN 1990, Section 6.

Note: For buildings, the combination rules may be given in the National Annex to Annex A of EN 1990.

2.4.3 Verification of static equilibrium (EQU)

(1) The reliability format for the verification of static equilibrium for buildings, as described in EN 1990, Table A1.2(A), also applies to design situations equivalent to (EQU), e.g. for the design of hold down anchors or the verification of uplift of bearings of continuous beams.

Section 3 Materials

3.1 Concrete

(1) Unless otherwise given by Eurocode 4, properties should be obtained by reference to EN 1992-1-1, 3.1 for normal concrete and to EN 1992-1-1, 11.3 for lightweight concrete.

(2) This Part of EN 1994 does not cover the design of composite structures with concrete strength classes lower than C20/25 and LC20/22 and higher than C60/75 and LC60/66.

(3) Shrinkage of concrete should be determined taking account of the ambient humidity, the dimensions of the element and the composition of the concrete.

(4) Where composite action is taken into account in buildings, the effects of autogenous shrinkage may be neglected in the determination of stresses and deflections.

Note: Experience shows that the values of shrinkage strain given in EN 1992-1-1 can give overestimates of the effects of shrinkage in composite structures. Values for shrinkage of concrete may be given in the National Annex. Recommended values for composite structures for buildings are given in Annex C.

3.2 Reinforcing steel

(1) Properties should be obtained by reference to EN 1992-1-1, 3.2.

(2) For composite structures, the design value of the modulus of elasticity E_s may be taken as equal to the value for structural steel given in EN 1993-1-1, 3.2.6.

3.3 Structural steel

(1) Properties should be obtained by reference to EN 1993-1-1, 3.1 and 3.2.

(2) The rules in this Part of EN 1994 apply to structural steel of nominal yield strength not more than 460 N/mm^2.

3.4 Connecting devices

3.4.1 General

(1) Reference should be made to EN 1993-1-8 for requirements for fasteners and welding consumables.

3.4.2 Headed stud shear connectors

(1) Reference should be made to EN 13918.

3.5 Profiled steel sheeting for composite slabs in buildings

(1) Properties should be obtained by reference to EN 1993-1-3, 3.1 and 3.2.

(2) The rules in this Part of EN 1994 apply to the design of composite slabs with profiled steel sheets manufactured from steel in accordance with EN 10025, cold formed steel sheet in accordance with EN 10149-2 or EN 10149-3 or galvanised steel sheet in accordance with EN 10147.

Note: The minimum value for the nominal thickness t of steel sheets may be given in the National Annex. The recommended value is 0,70 mm.

Section 4 Durability

4.1 General

(1) The relevant provisions given in EN 1990, EN 1992 and EN 1993 should be followed.

(2) Detailing of the shear connection should be in accordance with 6.6.5.

4.2 Profiled steel sheeting for composite slabs in buildings

(1)P The exposed surfaces of the steel sheeting shall be adequately protected to resist the particular atmospheric conditions.

(2) A zinc coating, if specified, should conform to the requirements of EN 10147 or with relevant standards in force.

(3) A zinc coating of total mass 275 g/m^2 (including both sides) is sufficient for internal floors in a non-aggressive environment, but the specification may be varied depending on service conditions.

Section 5 Structural analysis

5.1 Structural modelling for analysis

5.1.1 Structural modelling and basic assumptions

(1)P The structural model and basic assumptions shall be chosen in accordance with EN 1990, 5.1.1 and shall reflect the anticipated behaviour of the cross-sections, members, joints and bearings.

(2) Section 5 is applicable to composite structures in which most of the structural members and joints are either composite or of structural steel. Where the structural behaviour is essentially that of a reinforced or pre-stressed concrete structure, with only a few composite members, global analysis should be generally in accordance with EN 1992-1-1.

(3) Analysis of composite slabs with profiled steel sheeting in buildings should be in accordance with Section 9.

5.1.2 Joint modelling

(1) The effects of the behaviour of the joints on the distribution of internal forces and moments within a structure, and on the overall deformations of the structure, may generally be neglected, but where such effects are significant (such as in the case of semi-continuous joints) they should be taken into account, see Section 8 and EN 1993-1-8.

(2) To identify whether the effects of joint behaviour on the analysis need be taken into account, a distinction may be made between three joint models as follows, see 8.2 and EN 1993-1-8, 5.1.1:

- simple, in which the joint may be assumed not to transmit bending moments;
- continuous, in which the stiffness and/or resistance of the joint allow full continuity of the members to be assumed in the analysis;
- semi-continuous, in which the behaviour of the joint needs to be taken into account in the analysis.

(3) For buildings, the requirements of the various types of joint are given in Section 8 and in EN 1993-1-8.

5.1.3 Ground-structure interaction

(1)P Account shall be taken of the deformation characteristics of the supports where significant.

Note: EN 1997 gives guidance for calculation of soil-structure interaction.

5.2 Structural stability

5.2.1 Effects of deformed geometry of the structure

(1) The action effects may generally be determined using either:

- first-order analysis, using the initial geometry of the structure
- second-order analysis, taking into account the influence of the deformation of the structure.

(2)P The effects of the deformed geometry (second-order effects) shall be considered if they increase the action effects significantly or modify significantly the structural behaviour.

(3) First-order analysis may be used if the increase of the relevant internal forces or moments caused by the deformations given by first-order analysis is less than 10%. This condition may be assumed to be fulfilled if the following criterion is satisfied:

$$\alpha_{cr} \geq 10 \qquad (5.1)$$

where:

α_{cr} is the factor by which the design loading would have to be increased to cause elastic instability.

(4)P In determining the stiffness of the structure, appropriate allowances shall be made for cracking and creep of concrete and for the behaviour of the joints.

5.2.2 Methods of analysis for buildings

(1) Beam-and-column type plane frames may be checked for sway mode failure with first-order analysis if the criterion (5.1) is satisfied for each storey. In these structures α_{cr} may be calculated using the expression given in EN 1993-1-1, 5.2.1(4), provided that the axial compression in the beams is not significant and appropriate allowances are made for cracking of concrete, see 5.4.2.3, creep of concrete, see 5.4.2.2 and for the behaviour of the joints, see 8.2 and EN 1993-1-8, 5.1.

(2) Second-order effects may be included indirectly by using a first-order analysis with appropriate amplification.

(3) If second-order effects in individual members and relevant member imperfections are fully accounted for in the global analysis of the structure, individual stability checks for the members are un-necessary.

(4) If second-order effects in individual members or certain member imperfections (e.g. for flexural and/or lateral-torsional buckling) are not fully accounted for in the global analysis, the stability of individual members should be checked for the effects not included in the global analysis.

(5) If the global analysis neglects lateral-torsional effects, the resistance of a composite beam to lateral-torsional buckling may be checked using 6.4.

(6) For composite columns and composite compression members, flexural stability may be checked using one of the following methods:

(a) by global analysis in accordance with 5.2.2(3), with the resistance of cross-sections being verified in accordance with 6.7.3.6 or 6.7.3.7, or

(b) by analysis of the individual member in accordance with 6.7.3.4, taking account of end moments and forces from global analysis of the structure including global second-order effects and global imperfections when relevant. The analysis of the member should account for second-order effects in the member and relevant member imperfections, see 5.3.2.3, with the resistance of cross-sections being verified in accordance with 6.7.3.6 or 6.7.3.7, or

(c) for members in axial compression, by the use of buckling curves to account for second-order effects in the member and member imperfections, see 6.7.3.5. This verification should take account of end forces from global analysis of the structure including global second-order effects and global imperfections when relevant, and should be based on a buckling length equal to the system length.

(7) For structures in which the columns are structural steel, stability may also be verified by member checks based on buckling lengths, in accordance with EN 1993-1-1, 5.2.2(8) and 6.3.

5.3 Imperfections

5.3.1 Basis

(1)P Appropriate allowances shall be incorporated in the structural analysis to cover the effects of imperfections, including residual stresses and geometrical imperfections such as lack of verticality, lack of straightness, lack of flatness, lack of fit and the unavoidable minor eccentricities present in joints of the unloaded structure.

(2)P The assumed shape of imperfections shall take account of the elastic buckling mode of the structure or member in the plane of buckling considered, in the most unfavourable direction and form.

5.3.2 Imperfections in buildings

5.3.2.1 General

(1) Equivalent geometric imperfections, see 5.3.2.2 and 5.3.2.3, should be used, with values that reflect the possible effects of global imperfections and of local imperfections, unless the effects of local imperfections are included in the resistance formulae for member design, see 5.3.2.3.

(2) Within a global analysis, member imperfections in composite compression members may be neglected where, according to 5.2.1(2), first-order analysis may be used. Where second-order analysis should be used, member imperfections may be neglected within the global analysis if:

$$\bar{\lambda} \leq 0{,}5\sqrt{N_{\mathrm{pl,Rk}} / N_{\mathrm{Ed}}} \qquad (5.2)$$

where:

$\bar{\lambda}$ is defined in 6.7.3.3 and calculated for the member considered as hinged at its ends;

$N_{\mathrm{pl,Rk}}$ is defined in 6.7.3.3;

N_{Ed} is the design value of the normal force.

(3) Member imperfections should always be considered when verifying stability within a member's length in accordance with 6.7.3.6 or 6.7.3.7.

(4) Imperfections within steel compression members should be considered in accordance with EN 1993-1-1, 5.3.2 and 5.3.4.

5.3.2.2 Global imperfections

(1) The effects of imperfections should be allowed for in accordance with EN 1993-1-1, 5.3.2.

5.3.2.3 Member imperfections

(1) Design values of equivalent initial bow imperfection for composite columns and composite compression members should be taken from Table 6.5.

(2) For laterally unrestrained composite beams the effects of imperfections are incorporated within the formulae given for buckling resistance moment, see 6.4.

(3) For steel members the effects of imperfections are incorporated within the formulae given for buckling resistance, see EN 1993-1-1, 6.3.

5.4 Calculation of action effects

5.4.1 Methods of global analysis

5.4.1.1 General

(1) Action effects may be calculated by elastic global analysis, even where the resistance of a cross-section is based on its plastic or non-linear resistance.

(2) Elastic global analysis should be used for serviceability limit states, with appropriate corrections for non-linear effects such as cracking of concrete.

(3) Elastic global analysis should be used for verifications of the limit state of fatigue.

(4)P The effects of shear lag and of local buckling shall be taken into account if these significantly influence the global analysis.

(5) The effects of local buckling of steel elements on the choice of method of analysis may be taken into account by classifying cross-sections, see 5.5.

(6) The effects of local buckling of steel elements on stiffness may be ignored in normal composite sections. For cross-sections of Class 4, see EN 1993-1-5, 2.2.

(7) The effects on the global analysis of slip in bolt holes and similar deformations of connecting devices should be considered.

(8) Unless non-linear analysis is used, the effects of slip and separation on calculation of internal forces and moments may be neglected at interfaces between steel and concrete where shear connection is provided in accordance with 6.6.

5.4.1.2 Effective width of flanges for shear lag

(1)P Allowance shall be made for the flexibility of steel or concrete flanges affected by shear in their plane (shear lag) either by means of rigorous analysis, or by using an effective width of flange.

(2) The effects of shear lag in steel plate elements should be considered in accordance with EN 1993-1-1, 5.2.1(5).

(3) The effective width of concrete flanges should be determined in accordance with the following provisions.

(4) When elastic global analysis is used, a constant effective width may be assumed over the whole of each span. This value may be taken as the value $b_{eff,1}$ at mid-span for a span supported at both ends, or the value $b_{eff,2}$ at the support for a cantilever.

(5) At mid-span or an internal support, the total effective width b_{eff} , see Figure 5.1, may be determined as:

$$b_{eff} = b_0 + \sum b_{ei} \tag{5.3}$$

where:

b_0 is the distance between the centres of the outstand shear connectors;

b_{ei} is the value of the effective width of the concrete flange on each side of the web and taken as $L_e / 8$ but not greater than the geometric width b_i . The value b_i should be taken as the distance from the outstand shear connector to a point mid-way between adjacent webs, measured at mid-depth of the concrete flange, except that at a free edge b_i is the distance to the free edge. The length L_e should be taken as the approximate distance between points of zero bending moment. For typical continuous composite beams, where a moment envelope from various load arrangements governs the design, and for cantilevers, L_e may be assumed to be as shown in Figure 5.1.

(6) The effective width at an end support may be determined as:

$$b_{eff} = b_0 + \sum \beta_i \, b_{ei} \tag{5.4}$$

with:

$$\beta_i = (0{,}55 + 0{,}025 \, L_e / b_{ei}) \leq 1{,}0 \tag{5.5}$$

where:

b_{ei} is the effective width, see (5), of the end span at mid-span and L_e is the equivalent span of the end span according to Figure 5.1.

(7) The distribution of the effective width between supports and midspan regions may be assumed to be as shown in Figure 5.1.

(8) Where in buildings the bending moment distribution is influenced by the resistance or the rotational stiffness of a joint, this should be considered in the determination of the length L_e.

(9) For analysis of building structures, b_0 may be taken as zero and b_i measured from the centre of the web.

5.4.2 Linear elastic analysis

5.4.2.1 General

(1) Allowance should be made for the effects of cracking of concrete, creep and shrinkage of concrete, sequence of construction and pre-stressing.

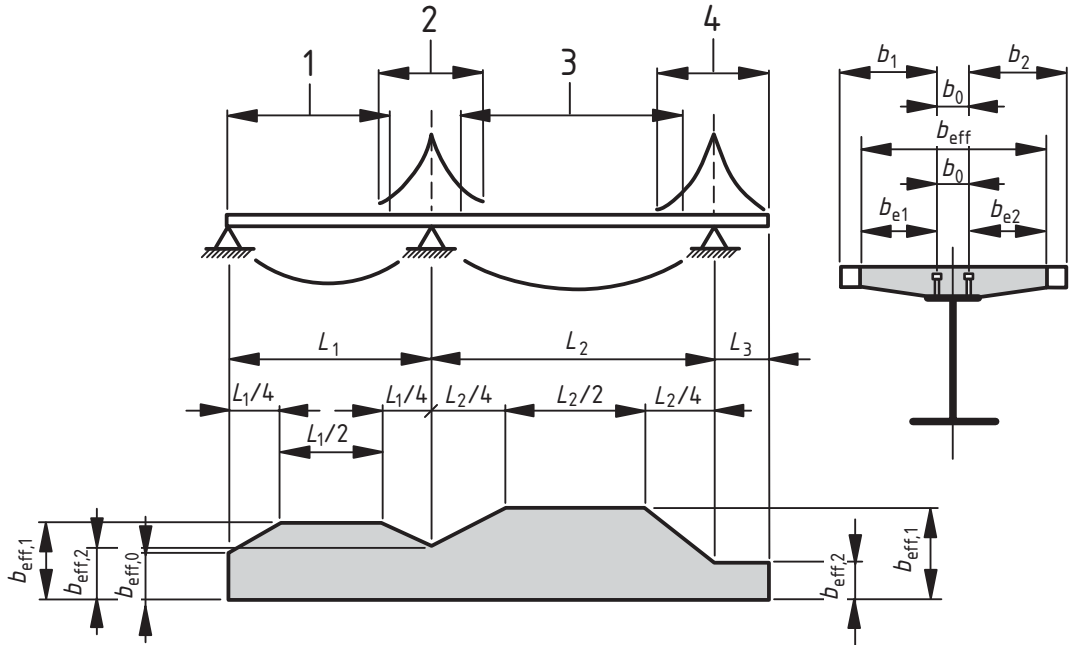

Key

1 $L_e = 0{,}85L_1$ for $b_{eff,1}$

2 $L_e = 0{,}25(L_1 + L_2)$ for $b_{eff,2}$

3 $L_e = 0{,}70L_2$ for $b_{eff,1}$

4 $L_e = 2L_3$ for $b_{eff,2}$

Figure 5.1 : Equivalent spans, for effective width of concrete flange

5.4.2.2 Creep and shrinkage

(1)P Appropriate allowance shall be made for the effects of creep and shrinkage of concrete.

(2) Except for members with both flanges composite, the effects of creep may be taken into account by using modular ratios n_L for the concrete. The modular ratios depending on the type of loading (subscript L) are given by:

$$n_L = n_0 \left(1 + \psi_L \varphi_t\right) \tag{5.6}$$

where:

n_0 is the modular ratio E_a / E_{cm} for short-term loading;

E_{cm} is the secant modulus of elasticity of the concrete for short-term loading according to EN 1992-1-1, Table 3.1 or Table 11.3.1;

φ_t is the creep coefficient $\varphi(t,t_0)$ according to EN 1992-1-1, 3.1.4 or 11.3.3, depending on the age (t) of concrete at the moment considered and the age (t_0) at loading,

ψ_L is the creep multiplier depending on the type of loading, which be taken as 1,1 for permanent loads, 0,55 for primary and secondary effects of shrinkage and 1,5 for pre-stressing by imposed deformations.

(3) For permanent loads on composite structures cast in several stages one mean value t_0 may be used for the determination of the creep coefficient. This assumption may also be used for pre-stressing by imposed deformations, if the age of all of the concrete in the relevant spans at the time of pre-stressing is more than 14 days.

(4) For shrinkage, the age at loading should generally be assumed to be one day.

(5) Where prefabricated slabs are used or when pre-stressing of the concrete slab is carried out before the shear connection has become effective, the creep coefficient and the shrinkage values from the time when the composite action becomes effective should be used.

(6) Where the bending moment distribution at t_0 is significantly changed by creep, for example in continuous beams of mixed structures with both composite and non- composite spans, the time-dependent secondary effects due to creep should be considered, except in global analysis for the ultimate limit state for members where all cross-sections are in Class 1 or 2. For the time-dependent secondary effects the modular ratio may be determined with a creep multiplier ψ_L of 0,55.

(7) Appropriate account should be taken of the primary and secondary effects caused by shrinkage and creep of the concrete flange. The effects of creep and shrinkage of concrete may be neglected in analysis for verifications of ultimate limit states other than fatigue, for composite members with all cross-sections in Class 1 or 2 and in which no allowance for lateral-torsional buckling is necessary; for serviceability limit states, see Section 7.

(8) In regions where the concrete slab is assumed to be cracked, the primary effects due to shrinkage may be neglected in the calculation of secondary effects.

(9) In composite columns and compression members, account should be taken of the effects of creep in accordance with 6.7.3.4(2).

(10) For double composite action with both flanges un-cracked (e.g. in case of pre-stressing) the effects of creep and shrinkage should be determined by more accurate methods.

(11) For simplification in structures for buildings that satisfy expression (5.1) or 5.2.2(1), are not mainly intended for storage and are not pre-stressed by controlled imposed deformations, the effects of creep in composite beams may be taken into account by replacing concrete areas A_c by effective equivalent steel areas A_c / n for both short-term and long-term loading, where n is the nominal modular ratio corresponding to an effective modulus of elasticity for concrete $E_{c,eff}$ taken as $E_{cm} / 2$.

5.4.2.3 Effects of cracking of concrete

(1)P Appropriate allowance shall be made for the effects of cracking of concrete.

(2) The following method may be used for the determination of the effects of cracking in composite beams with concrete flanges. First the envelope of the internal forces and moments for the characteristic combinations, see EN 1990, 6.5.3, including long-term effects should be calculated using the flexural stiffness $E_a I_1$ of the un-cracked sections. This is defined as “un-cracked analysis”. In regions where the extreme fibre tensile stress in the concrete due to the envelope of global effects exceeds twice the strength f_{ctm} or f_{lctm}, see EN1992-1-1, Table 3.1 or Table 11.3.1, the stiffness should be reduced to $E_a I_2$, see 1.5.2.12. This distribution of stiffness may be used for ultimate

limit states and for serviceability limit states. A new distribution of internal forces and moments, and deformation if appropriate, is then determined by re-analysis. This is defined as "cracked analysis".

(3) For continuous composite beams with the concrete flanges above the steel section and not pre-stressed, including beams in frames that resist horizontal forces by bracing, the following simplified method may be used. Where all the ratios of the length of adjacent continuous spans (shorter/longer) between supports are at least 0,6, the effect of cracking may be taken into account by using the flexural stiffness $E_a I_2$ over 15% of the span on each side of each internal support, and as the un-cracked values $E_a I_1$ elsewhere.

(4) The effect of cracking of concrete on the flexural stiffness of composite columns and compression members should be determined in accordance with 6.7.3.4.

(5) In buildings, the contribution of any encasement to a beam may be determined by using the average of the cracked and un-cracked stiffness of the encasement. The area of concrete in compression may be determined from the plastic stress distribution.

5.4.2.4 Stages and sequence of construction

(1)P Appropriate analysis shall be made to cover the effects of staged construction including where necessary separate effects of actions applied to structural steel and to wholly or partially composite members.

(2) The effects of sequence of construction may be neglected in analysis for ultimate limit states other than fatigue, for composite members where all cross-sections are in Class 1 or 2 and in which no allowance for lateral-torsional buckling is necessary.

5.4.2.5 Temperature effects

(1) Account should be taken of effects due to temperature in accordance with EN 1991-1-5.

(2) Temperature effects may normally be neglected in analysis for the ultimate limit states other than fatigue, for composite members where all cross-sections are in Class 1 or Class 2 and in which no allowance for lateral-torsional buckling is necessary.

5.4.2.6 Pre-stressing by controlled imposed deformations

(1)P Where pre-stressing by controlled imposed deformations (e.g. jacking of supports) is provided, the effects of possible deviations from the assumed values of imposed deformations and stiffness on the internal moments and forces shall be considered for analysis of ultimate and serviceability limit states.

(2) Unless a more accurate method is used to determine internal moments and forces, the characteristic values of indirect actions due to imposed deformations may be calculated with the characteristic or nominal values of properties of materials and of imposed deformation, if the imposed deformations are controlled.

5.4.3 Non-linear global analysis

(1) Non-linear analysis may be used in accordance with EN 1992-1-1, 5.7 and EN 1993-1-1, 5.4.3.

(2)P The behaviour of the shear connection shall be taken into account.

(3)P Effects of the deformed geometry of the structure should be taken into account in accordance with 5.2.

5.4.4 Linear elastic analysis with limited redistribution for buildings

(1) Provided that second-order effects need not be considered, linear elastic analysis with limited redistribution may be applied to continuous beams and frames for verification of limit states other than fatigue.

(2) The bending moment distribution given by a linear elastic global analysis according to 5.4.2 may be redistributed in a way that satisfies equilibrium and takes account of the effects of inelastic behaviour of materials, and all types of buckling.

(3) Bending moments from a linear elastic analysis may be redistributed:

a) in composite beams with full or partial shear connection as given in (4) - (7);
b) in steel members in accordance with EN 1993-1-1, 5.4.1(4);
c) in concrete members subject mainly to flexure in accordance with EN 1992-1-1, 5.5;
d) in partially-encased beams without a concrete or composite slab, in accordance with (b) or (c), whichever is the more restrictive.

(4) For ultimate limit state verifications other than for fatigue, the elastic bending moments in composite beams may be modified according to (5) – (7) where:

- the beam is a continuous composite member, or part of a frame that resists horizontal forces by bracing,
- the beam is connected by rigid and full-strength joints, or by one such joint and one nominally-pinned joint,
- for a partially-encased composite beam, either it is established that rotation capacity is sufficient for the degree of redistribution adopted, or the contribution of the reinforced concrete encasement in compression is neglected when calculating the resistance moment at sections where the bending moment is reduced,
- each span is of uniform depth and
- no allowance for lateral-torsional buckling is necessary.

(5) Where (4) applies, the bending moments in composite beams determined by linear elastic global analysis may be modified:

- by reducing maximum hogging moments by amounts not exceeding the percentages given in Table 5.1, or
- in beams with all cross-sections in Classes 1 or 2 only, by increasing maximum hogging moments by amounts not exceeding 10%, for un-cracked elastic analysis or 20% for cracked elastic analysis, see 5.4.2.3,

unless it is verified that the rotation capacity permits a higher value.

Table 5.1 : Limits to redistribution of hogging moments, per cent of the initial value of the bending moment to be reduced

Class of cross-section in hogging moment region	1	2	3	4
For un-cracked analysis	40	30	20	10
For cracked analysis	25	15	10	0

(6) For grades of structural steel higher than S355, redistribution should only be applied to beams with all cross-sections in Class 1 and Class 2. Redistribution by reduction of maximum hogging moments should not exceed 30% for an un-cracked analysis and 15% for a cracked analysis, unless it is demonstrated that the rotation capacity permits a higher value.

(7) For composite cross-sections in Class 3 or 4, the limits in Table 5.1 relate to bending moments assumed in design to be applied to the composite member. Moments applied to the steel member should not be redistributed.

5.4.5 Rigid plastic global analysis for buildings

(1) Rigid plastic global analysis may be used for ultimate limit state verifications other than fatigue, where second-order effects do not have to be considered and provided that:

- all the members and joints of the frame are steel or composite,
- the steel material satisfies EN 1993-1-1, 3.2.2,
- the cross-sections of steel members satisfy EN 1993-1-1, 5.6 and
- the joints are able to sustain their plastic resistance moments for a sufficient rotation capacity.

(2) In beams and frames for buildings, it is not normally necessary to consider the effects of alternating plasticity.

(3)P Where rigid-plastic global analysis is used, at each plastic hinge location:

a) the cross-section of the structural steel section shall be symmetrical about a plane parallel to the plane of the web or webs,

b) the proportions and restraints of steel components shall be such that lateral-torsional buckling does not occur,

c) lateral restraint to the compression flange shall be provided at all hinge locations at which plastic rotation may occur under any load case,

d) the rotation capacity shall be sufficient, when account is taken of any axial compression in the member or joint, to enable the required hinge rotation to develop and

e) where rotation requirements are not calculated, all members containing plastic hinges shall have effective cross-sections of Class 1 at plastic hinge locations.

(4) For composite beams in buildings, the rotation capacity may be assumed to be sufficient where:

a) the grade of structural steel does not exceed S355,
b) the contribution of any reinforced concrete encasement in compression is neglected when calculating the design resistance moment,
c) all effective cross-sections at plastic hinge locations are in Class 1; and all other effective cross-sections are in Class 1 or Class 2,
d) each beam-to-column joint has been shown to have sufficient design rotation capacity, or to have a design resistance moment at least 1,2 times the design plastic resistance moment of the connected beam,
e) adjacent spans do not differ in length by more than 50% of the shorter span,
f) end spans do not exceed 115% of the length of the adjacent span,
g) in any span in which more than half of the total design load for that span is concentrated within a length of one-fifth of the span, then at any hinge location where the concrete slab is in compression, not more than 15% of the overall depth of the member should be in compression; this does not apply where it can be shown that the hinge will be the last to form in that span and
h) the steel compression flange at a plastic hinge location is laterally restrained.

(5) Unless verified otherwise, it should be assumed that composite columns do not have rotation capacity.

(6) Where the cross-section of a steel member varies along its length, EN 1993-1-1, 5.6(3) is applicable.

(7) Where restraint is required by (3)(c) or 4(h), it should be located within a distance along the member from the calculated hinge location that does not exceed half the depth of the steel section.

5.5 Classification of cross-sections

5.5.1 General

(1)P The classification system defined in EN 1993-1-1, 5.5.2 applies to cross-sections of composite beams.

(2) A composite section should be classified according to the least favourable class of its steel elements in compression. The class of a composite section normally depends on the direction of the bending moment at that section.

(3) A steel compression element restrained by attaching it to a reinforced concrete element may be placed in a more favourable class, provided that the resulting improvement in performance has been established.

(4) For classification, the plastic stress distribution should be used except at the boundary between Classes 3 and 4, where the elastic stress distribution should be used taking into account sequence of construction and the effects of creep and shrinkage. For classification, design values of strengths of materials should be used. Concrete in tension should be neglected. The distribution of the stresses should be determined for the gross cross-section of the steel web and the effective flanges.

(5) For cross-sections in Class 1 and 2 with bars in tension, reinforcement used within the effective width should have a ductility Class B or C, see EN 1992-1-1, Table C.1. Additionally for a section

whose resistance moment is determined by 6.2.1.2, 6.2.1.3 or 6.2.1.4, a minimum area of reinforcement A_s within the effective width of the concrete flange should be provided to satisfy the following condition:

$$A_s \geq \rho_s A_c \tag{5.7}$$

with

$$\rho_s = \delta \frac{f_y}{235} \frac{f_{ctm}}{f_{sk}} \sqrt{k_c} \tag{5.8}$$

where:

A_c is the effective area of the concrete flange;

f_y is the nominal value of the yield strength of the structural steel in N/mm^2;

f_{sk} is the characteristic yield strength of the reinforcement;

f_{ctm} is the mean tensile strength of the concrete, see EN1992-1-1, Table 3.1 or Table 11.3.1;

k_c is a coefficient given in 7.4.2;

δ is equal to 1,0 for Class 2 cross-sections, and equal to 1,1 for Class 1 cross-sections at which plastic hinge rotation is required.

(6) Welded mesh should not be included in the effective section unless it has been shown to have sufficient ductility, when built into a concrete slab, to ensure that it will not fracture.

(7) In global analysis for stages in construction, account should be taken of the class of the steel section at the stage considered.

5.5.2 Classification of composite sections without concrete encasement

(1) A steel compression flange that is restrained from buckling by effective attachment to a concrete flange by shear connectors may be assumed to be in Class 1 if the spacing of connectors is in accordance with 6.6.5.5.

(2) The classification of other steel flanges and webs in compression in composite beams without concrete encasement should be in accordance with EN 1993-1-1, Table 5.2. An element that fails to satisfy the limits for Class 3 should be taken as Class 4.

(3) Cross-sections with webs in Class 3 and flanges in Classes 1 or 2 may be treated as an effective cross-section in Class 2 with an effective web in accordance with EN1993-1-1, 6.2.2.4.

5.5.3 Classification of composite sections for buildings with concrete encasement

(1) A steel outstand flange of a composite section with concrete encasement in accordance with (2) below may be classified in accordance with Table 5.2.

(2) For a web of a concrete encased section, the concrete that encases it should be reinforced, mechanically connected to the steel section, and capable of preventing buckling of the web and of any part of the compression flange towards the web. It may be assumed that the above requirements are satisfied if:

a) the concrete that encases a web is reinforced by longitudinal bars and stirrups, and/or welded mesh,

b) the requirements for the ratio b_c / b given in Table 5.2 are fulfilled,

c) the concrete between the flanges is fixed to the web in accordance with Figure 6.10 by welding the stirrups to the web or by means of bars of at least 6 mm diameter through holes and/or studs with a diameter greater than 10 mm welded to the web and

d) the longitudinal spacing of the studs on each side of the web or of the bars through holes is not greater than 400 mm. The distance between the inner face of each flange and the nearest row of fixings to the web is not greater than 200 mm. For steel sections with a maximum depth of not less than 400 mm and two or more rows of fixings, a staggered arrangement of the studs and/or bars through holes may be used.

(3) A steel web in Class 3 encased in concrete in accordance with (2) above may be represented by an effective web of the same cross-section in Class 2.

Table 5.2 : Classification of steel flanges in compression for partially-encased sections

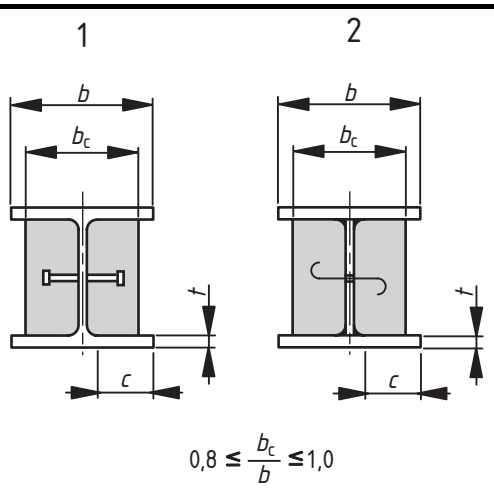

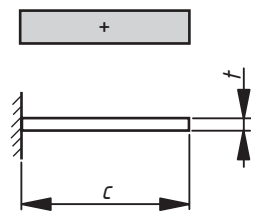

Stress distribution
(compression positive)

Class	Type	Limit
1	(1) rolled or (2) welded	c/t ≤ 9ε
2		c/t ≤ 14ε
3		c/t ≤ 20ε

Section 6 Ultimate limit states

6.1 Beams

6.1.1 Beams for buildings

(1)P Composite beams are defined in 1.5.2. Typical types of cross-section are shown in Figure 6.1 with either a solid slab or a composite slab. Partially–encased beams are those in which the web of the steel section is encased by reinforced concrete and shear connection is provided between the concrete and the steel components.

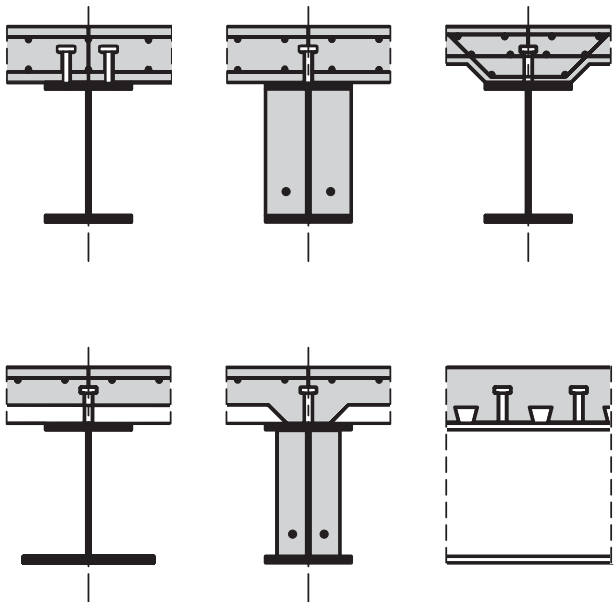

Figure 6.1 : Typical cross-sections of composite beams

(2) Design resistances of composite cross-sections in bending or/and vertical shear should be determined in accordance with 6.2 for composite beams with steel sections and 6.3 for partially-encased composite beams.

(3)P Composite beams shall be checked for:

- resistance of critical cross-sections (6.2 and 6.3);
- resistance to lateral-torsional buckling (6.4);
- resistance to shear buckling (6.2.2.3) and transverse forces on webs (6.5);
- resistance to longitudinal shear (6.6).

(4)P Critical cross-sections include:

- sections of maximum bending moment;
- supports;
- sections subjected to concentrated loads or reactions;
- places where a sudden change of cross-section occurs, other than a change due to cracking of concrete.

(5) A cross-section with a sudden change should be considered as a critical cross-section when the ratio of the greater to the lesser resistance moment is greater than 1,2.

(6) For checking resistance to longitudinal shear, a critical length consists of a length of the interface between two critical cross-sections. For this purpose critical cross-sections also include:

- free ends of cantilevers;
- in tapering members, sections so chosen that the ratio of the greater to the lesser plastic resistance moments (under flexural bending of the same direction) for any pair of adjacent cross-sections does not exceed 1,5.

(7)P The concepts "full shear connection" and "partial shear connection" are applicable only to beams in which plastic theory is used for calculating bending resistances of critical cross-sections.

A span of a beam, or a cantilever, has full shear connection when increase in the number of shear connectors would not increase the design bending resistance of the member. Otherwise, the shear connection is partial.

Note: Limits to the use of partial shear connection are given in 6.6.1.2.

6.1.2 Effective width for verification of cross-sections

(1) The effective width of the concrete flange for verification of cross-sections should be determined in accordance with 5.4.1.2 taking into account the distribution of effective width between supports and mid-span regions.

(2) As a simplification for buildings, a constant effective width may be assumed over the whole region in sagging bending of each span. This value may be taken as the value $b_{\mathrm{eff},1}$ at mid-span. The same assumption applies over the whole region in hogging bending on both sides of an intermediate support. This value may be taken as the value $b_{\mathrm{eff},2}$ at the relevant support.

6.2 Resistances of cross-sections of beams

6.2.1 Bending resistance

6.2.1.1 General

(1)P The design bending resistance shall be determined by rigid-plastic theory only where the effective composite cross-section is in Class 1 or Class 2 and where pre-stressing by tendons is not used.

(2) Elastic analysis and non-linear theory for bending resistance may be applied to cross-sections of any class.

(3) For elastic analysis and non-linear theory it may be assumed that the composite cross-section remains plane if the shear connection and the transverse reinforcement are designed in accordance with 6.6, considering appropriate distributions of design longitudinal shear force.

(4)P The tensile strength of concrete shall be neglected.

(5) Where the steel section of a composite member is curved in plan, the effects of curvature should be taken into account.

6.2.1.2 Plastic resistance moment $M_{\mathrm{pl,Rd}}$ of a composite cross-section

(1) The following assumptions should be made in the calculation of $M_{\mathrm{pl,Rd}}$:

a) there is full interaction between structural steel, reinforcement, and concrete;

b) the effective area of the structural steel member is stressed to its design yield strength f_{yd} in tension or compression;

c) the effective areas of longitudinal reinforcement in tension and in compression are stressed to their design yield strength f_{sd} in tension or compression. Alternatively, reinforcement in compression in a concrete slab may be neglected;

d) the effective area of concrete in compression resists a stress of $0{,}85 f_{\mathrm{cd}}$, constant over the whole depth between the plastic neutral axis and the most compressed fibre of the concrete, where f_{cd} is the design cylinder compressive strength of concrete.

Typical plastic stress distributions are shown in Figure 6.2.

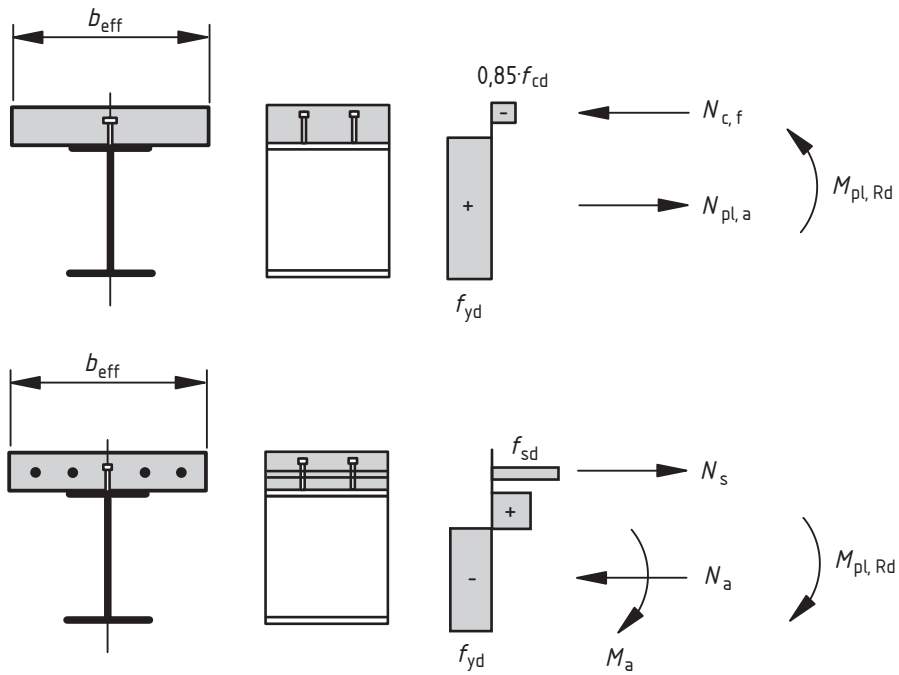

Figure 6.2 : Examples of plastic stress distributions for a composite beam with a solid slab and full shear connection in sagging and hogging bending

(2) For composite cross-sections with structural steel grade S420 or S460, where the distance x_{pl} between the plastic neutral axis and the extreme fibre of the concrete slab in compression exceeds 15% of the overall depth h of the member, the design resistance moment M_{Rd} should be taken as $\beta M_{pl,Rd}$ where β is the reduction factor given in Figure 6.3. For values of x_{pl}/h greater than 0,4 the resistance to bending should be determined from 6.2.1.4 or 6.2.1.5.

(3) Where plastic theory is used and reinforcement is in tension, that reinforcement should be in accordance with 5.5.1(5).

(4)P For buildings, profiled steel sheeting in compression shall be neglected.

(5) For buildings, any profiled steel sheeting in tension included within the effective section should be assumed to be stressed to its design yield strength $f_{yp,d}$.

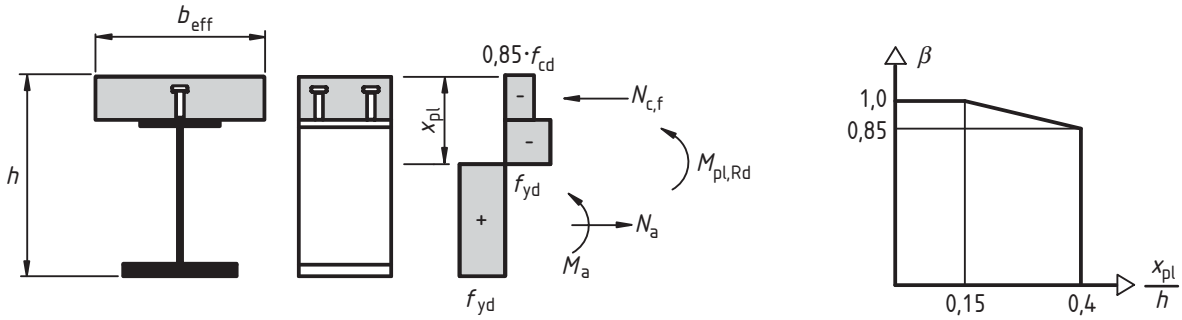

Figure 6.3 : Reduction factor β for $M_{pl,Rd}$

6.2.1.3 Plastic resistance moment of sections with partial shear connection in buildings

(1) In regions of sagging bending, partial shear connection in accordance with 6.6.1 and 6.6.2.2 may be used in composite beams for buildings.

(2) Unless otherwise verified, the plastic resistance moment in hogging bending should be determined in accordance with 6.2.1.2 and appropriate shear connection should be provided to ensure yielding of reinforcement in tension.

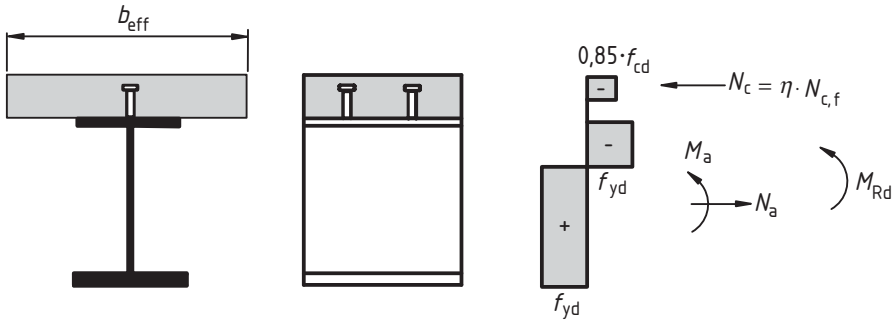

Figure 6.4 : Plastic stress distribution under sagging bending for partial shear connection

(3) Where ductile shear connectors are used, the resistance moment of the critical cross-section of the beam M_{Rd} may be calculated by means of rigid plastic theory in accordance with 6.2.1.2, except that a reduced value of the compressive force in the concrete flange N_c should be used in place of the force N_{cf} given by 6.2.1.2(1)(d). The ratio $\eta = N_c/N_{c,f}$ is the degree of shear connection. The location of the plastic neutral axis in the slab should be determined by the new force N_c , see Figure 6.4. There is a second plastic neutral axis within the steel section, which should be used for the classification of the web.

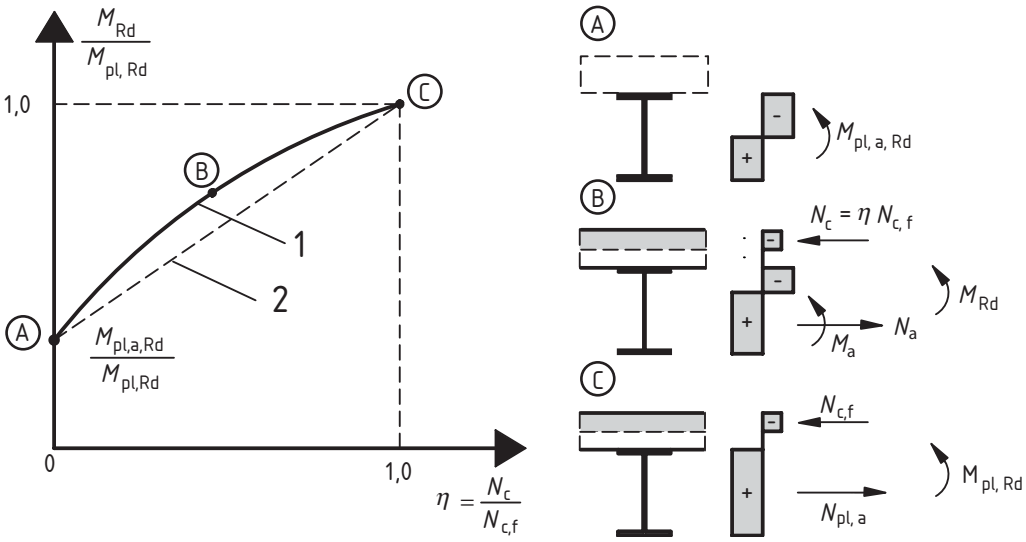

Key

1 plastic theory

2 simplified method

Figure 6.5 : Relation between M_{Rd} and N_c (for ductile shear connectors)

(4) The relation between M_{Rd} and N_c in (3) is qualitatively given by the convex curve ABC in Figure 6.5 where $M_{pl,a,Rd}$ and $M_{pl,Rd}$ are the design plastic resistances to sagging bending of the structural steel section alone, and of the composite section with full shear connection, respectively.

(5) For the method given in (3), a conservative value of M_{Rd} may be determined by the straight line AC in Figure 6.5:

$$M_{Rd} = M_{pl,a,Rd} + \left(M_{pl,Rd} - M_{pl,a,Rd}\right)\frac{N_c}{N_{cf}} \tag{6.1}$$

6.2.1.4 Non-linear resistance to bending

(1)P Where the bending resistance of a composite cross-section is determined by non-linear theory, the stress-strain relationships of the materials shall be taken into account.

(2) It should be assumed that the composite cross-section remains plane and that the strain in bonded reinforcement, whether in tension or compression, is the same as the mean strain in the surrounding concrete.

(3) The stresses in the concrete in compression should be derived from the stress-strain curves given in EN 1992-1-1, 3.1.7.

(4) The stresses in the reinforcement should be derived from the bi-linear diagrams given in EN 1992-1-1, 3.2.7.

(5) The stresses in structural steel in compression or tension should be derived from the bi-linear diagram given in EN 1993-1-1, 5.4.3(4) and should take account of the effects of the method of construction (e.g. propped or un-propped).

(6) For Class 1 and Class 2 composite cross-sections with the concrete flange in compression, the non-linear resistance to bending M_{Rd} may be determined as a function of the compressive force in the concrete N_c using the simplified expressions (6.2) and (6.3), as shown in Figure 6.6:

$$M_{Rd} = M_{a,Ed} + (M_{el,Rd} - M_{a,Ed})\frac{N_c}{N_{c,el}} \qquad \text{for } N_c \le N_{c,el} \tag{6.2}$$

$$M_{Rd} = M_{el,Rd} + (M_{pl,Rd} - M_{el,Rd})\frac{N_c - N_{c,el}}{N_{c,f} - N_{c,el}} \qquad \text{for } N_{c,el} \le N_c \le N_{c,f} \tag{6.3}$$

with:

$$M_{el,Rd} = M_{a,Ed} + k\,M_{c,Ed} \tag{6.4}$$

where:

$M_{a,Ed}$ is the design bending moment applied to the structural steel section before composite behaviour;

$M_{c,Ed}$ is the part of the design bending moment applied to the composite section;

k is the lowest factor such that a stress limit in 6.2.1.5(2) is reached; where un-propped construction is used, the sequence of construction should be taken into account;

$N_{c,el}$ is the compressive force in the concrete flange corresponding to moment $M_{el,Rd}$.

For cross sections where 6.2.1.2 (2) applies, in expression (6.3) and in Figure 6.6 instead of $M_{pl,Rd}$ the reduced value $\beta M_{pl,Rd}$ should be used.

(7) For buildings, the determination of $M_{el.Rd}$ may be simplified using 5.4.2.2(11).

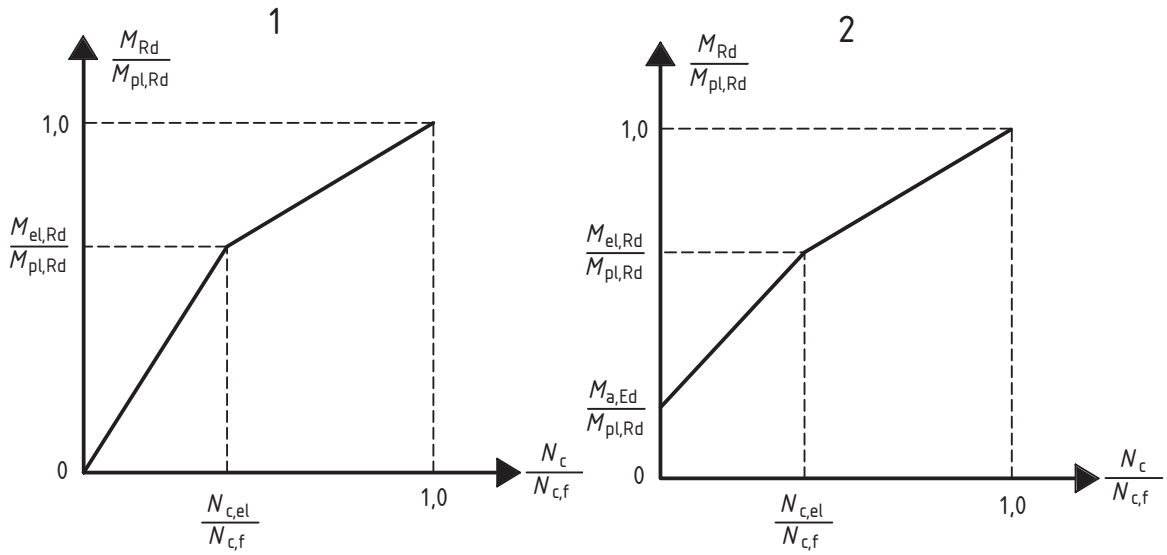

Key

1 propped construction

2 unpropped construction

Figure 6.6 : Simplified relationship between M_{Rd} and N_c for sections with the concrete slab in compression

6.2.1.5 Elastic resistance to bending

(1) Stresses should be calculated by elastic theory, using an effective width of the concrete flange in accordance with 6.1.2. For cross-sections in Class 4, the effective structural steel section should be determined in accordance with EN 1993-1-5, 4.3.

(2) In the calculation of the elastic resistance to bending based on the effective cross-section, the limiting stresses should be taken as:

- f_{cd} in concrete in compression;
- f_{yd} in structural steel in tension or compression;
- f_{sd} in reinforcement in tension or compression. Alternatively, reinforcement in compression in a concrete slab may be neglected.

(3)P Stresses due to actions on the structural steelwork alone shall be added to stresses due to actions on the composite member.

(4) Unless a more precise method is used, the effect of creep should be taken into account by use of a modular ratio according to 5.4.2.2.

(5) In cross-sections with concrete in tension and assumed to be cracked, the stresses due to primary (isostatic) effects of shrinkage may be neglected.

6.2.2 Resistance to vertical shear

6.2.2.1 Scope

(1) Clause 6.2.2 applies to composite beams with a rolled or welded structural steel section with a solid web, which may be stiffened.

6.2.2.2 Plastic resistance to vertical shear

(1) The resistance to vertical shear $V_{pl,Rd}$ should be taken as the resistance of the structural steel section $V_{pl,a,Rd}$ unless the value for a contribution from the reinforced concrete part of the beam has been established.

(2) The design plastic shear resistance $V_{pl,a,Rd}$ of the structural steel section should be determined in accordance with EN 1993-1-1, 6.2.6.

6.2.2.3 Shear buckling resistance

(1) The shear buckling resistance $V_{b,Rd}$ of an uncased steel web should be determined in accordance with EN 1993-1-5, 5.

(2) No account should be taken of a contribution from the concrete slab, unless a more precise method than the one of EN 1993-1-5, 5 is used and unless the shear connection is designed for the relevant vertical force.

6.2.2.4 Bending and vertical shear

(1) Where the vertical shear force V_{Ed} exceeds half the shear resistance V_{Rd} given by $V_{pl,Rd}$ in 6.2.2.2 or $V_{b,Rd}$ in 6.2.2.3, whichever is the smaller, allowance should be made for its effect on the resistance moment.

(2) For cross-sections in Class 1 or 2, the influence of the vertical shear on the resistance to bending may be taken into account by a reduced design steel strength $(1 - \rho) f_{yd}$ in the shear area as shown in Figure 6.7 where:

$$\rho = (2V_{Ed} / V_{Rd} - 1)^2 \qquad (6.5)$$

and V_{Rd} is the appropriate resistance to vertical shear, determined in accordance with 6.2.2.2 or 6.2.2.3.

(3) For cross-sections in Class 3 and 4, EN 1993-1-5, 7.1 is applicable using the calculated stresses of the composite section.

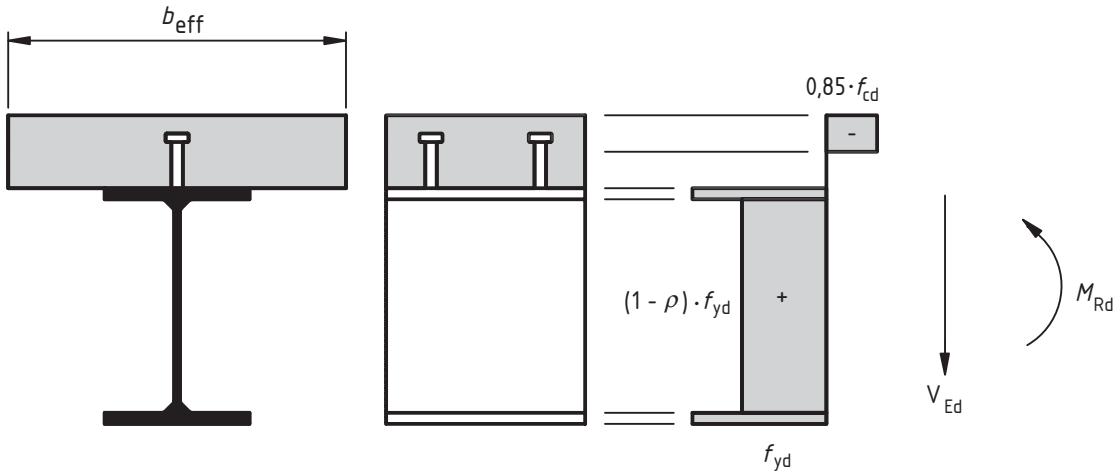

Figure 6.7 : Plastic stress distribution modified by the effect of vertical shear

6.3 Resistance of cross-sections of beams for buildings with partial encasement

6.3.1 Scope

(1) Partially–encased beams are defined in 6.1.1(1). A concrete or composite slab can also form part of the effective section of the composite beam, provided that it is attached to the steel section by a shear connection in accordance with 6.6. Typical cross-sections are shown in Figure 6.8.

(2) Clause 6.3 is applicable to partially encased sections in Class 1 or Class 2, provided that d/t_w is not greater than 124ε.

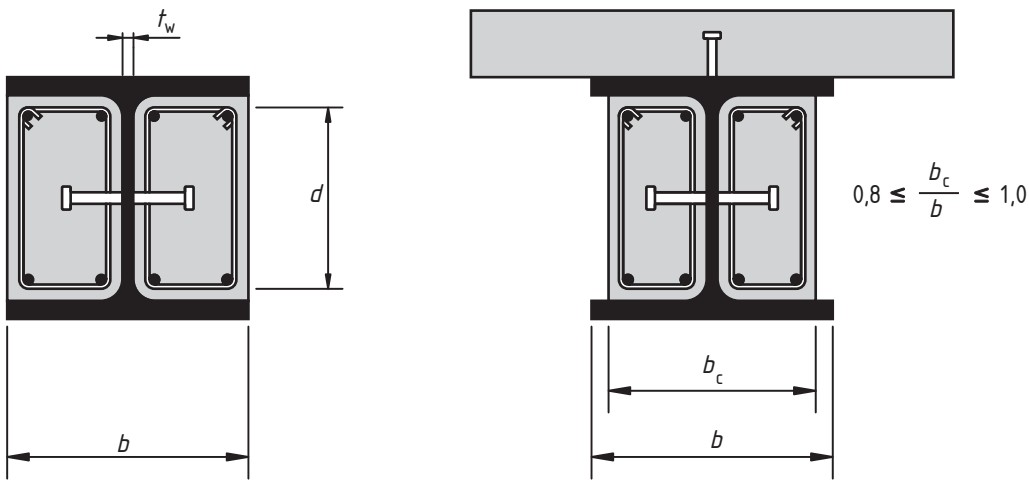

Figure 6.8 : Typical cross-sections of partially-encased beams

(3) The provisions elsewhere in EN 1994-1-1 are applicable, unless different rules are given in 6.3.

6.3.2 Bending resistance

(1) Full shear connection should be provided between the structural steel section and the web encasement in accordance with 6.6.

(2) The design resistance moment may be determined by plastic theory. Reinforcement in compression in the concrete encasement may be neglected. Some examples of typical plastic stress distributions are shown in Figure 6.9.

(3) Partial shear connection may be used for the compressive force in any concrete or composite slab forming part of the effective section.

(4) Where partial shear connection is used with ductile connectors, the plastic resistance moment of the beam should be calculated in accordance with 6.3.2(2) and 6.2.1.2(1), except that a reduced value of the compressive force in the concrete or composite slab N_c should be used as in 6.2.1.3(3), (4) and (5).

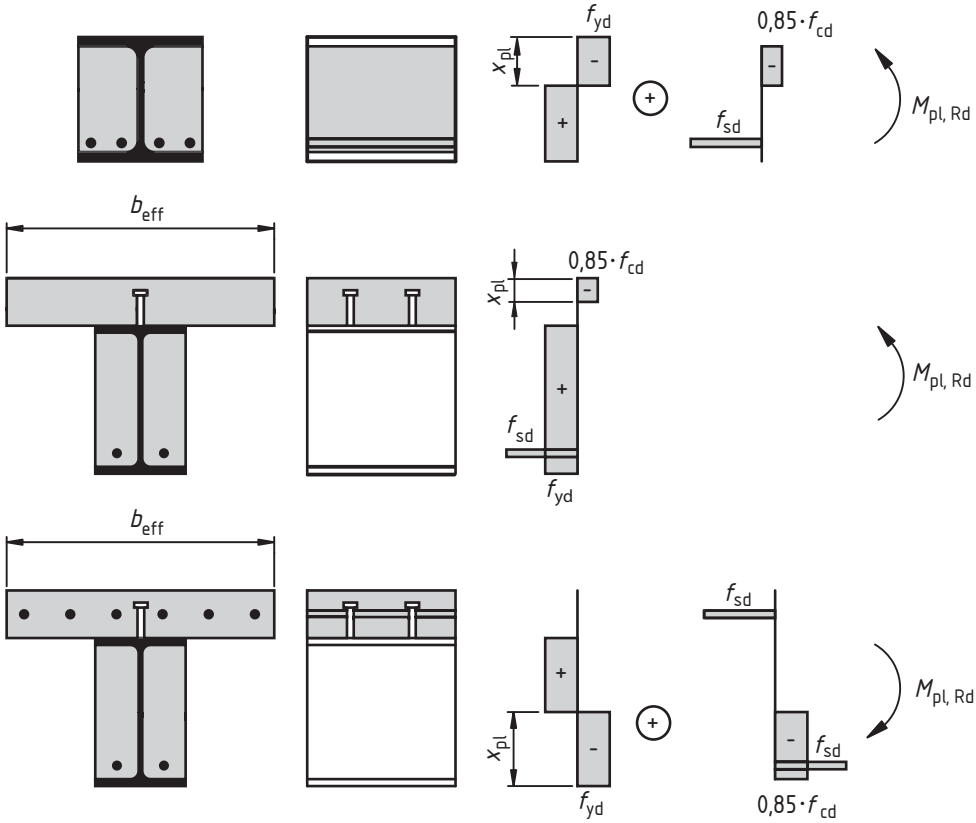

Figure 6.9 : Examples of plastic stress distributions for effective sections

6.3.3 Resistance to vertical shear

(1) The design shear resistance of the structural steel section $V_{pl,a,Rd}$ should be determined by plastic theory in accordance with 6.2.2.2(2).

(2) The contribution of the web encasement to shear may be taken into account for the determination of the design shear resistance of the cross-section if stirrups are used in accordance with Figure 6.10. Appropriate shear connection should be provided between the encasement and the structural steel section. If the stirrups of the encasement are open, they should be attached to the web by full strength welds. Otherwise the contribution of the shear reinforcement should be neglected.

(3) Unless a more accurate analysis is used, the distribution of the total vertical shear V_{Ed} into the parts $V_{a,Ed}$ and $V_{c,Ed}$, acting on the steel section and the reinforced concrete web encasement respectively, may be assumed to be in the same ratio as the contributions of the steel section and the reinforced web encasement to the bending resistance $M_{pl,Rd}$.

(4) The resistance to vertical shear for the web encasement should take account of cracking of concrete and should be verified in accordance with EN 1992-1-1, 6.2 and the other relevant design requirements of that Standard.

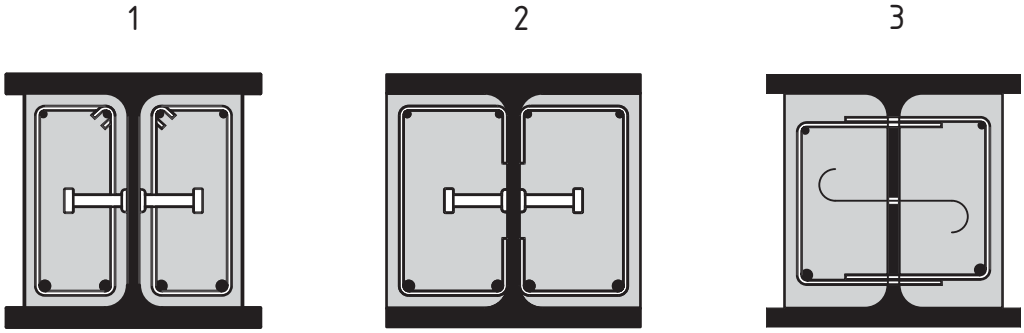

Key

1 closed stirrups

2 open stirrups welded to the web

3 stirrups through the web

Figure 6.10 : Arrangement of stirrups

6.3.4 Bending and vertical shear

(1) Where the design vertical shear force $V_{a,Ed}$ exceeds half the design plastic resistance $V_{pl,a,Rd}$ of the structural steel section to vertical shear, allowance should be made for its effect on the resistance moment.

(2) The influence of the vertical shear on the resistance to bending may be expressed as in 6.2.2.4(2) with the following modification. In expression (6.5), the ratio $V_{Ed}/V_{pl,Rd}$ is replaced by $V_{a,Ed}/V_{pl,a,Rd}$ to calculate the reduced design steel strength in the shear area of the structural steel section. Then, the design reduced plastic resistance moment M_{Rd} should be calculated in accordance with 6.3.2.

6.4 Lateral-torsional buckling of composite beams

6.4.1 General

(1) A steel flange that is attached to a concrete or composite slab by shear connection in accordance with 6.6 may be assumed to be laterally stable, provided that lateral instability of the concrete slab is prevented.

(2) All other steel flanges in compression should be checked for lateral stability.

(3) The methods in EN 1993-1-1, 6.3.2.1-6.3.2.3 and, more generally, 6.3.4 are applicable to the steel section on the basis of the cross-sectional forces on the composite section, taking into account effects of sequence of construction in accordance with 5.4.2.4. The lateral and elastic torsional restraint at the level of the shear connection to the concrete slab may be taken into account.

(4) For composite beams in buildings with cross-sections in Class 1, 2 or 3 and of uniform structural steel section, the method given in 6.4.2 may be used.

6.4.2 Verification of lateral-torsional buckling of continuous composite beams with cross-sections in Class 1, 2 and 3 for buildings

(1) The design buckling resistance moment of a laterally unrestrained continuous composite beam (or a beam within a frame that is composite throughout its length) with Class 1, 2 or 3 cross-sections and with a uniform structural steel section should be taken as:

$$M_{\mathrm{b,Rd}} = \chi_{\mathrm{LT}} M_{\mathrm{Rd}} \tag{6.6}$$

where:

χ_{LT} is the reduction factor for lateral-torsional buckling depending on the relative slenderness $\bar{\lambda}_{\mathrm{LT}}$;

M_{Rd} is the design resistance moment under hogging bending at the relevant internal support (or beam-to-column joint).

Values of the reduction factor χ_{LT} may be obtained from EN 1993-1-1, 6.3.2.2 or 6.3.2.3.

(2) For cross-sections in Class 1 or 2, M_{Rd} should be determined according to 6.2.1.2 for a beam whose bending resistance is based on plastic theory, or 6.2.1.4 for a beam whose bending resistance is based on non-linear theory, or 6.3.2 for a partially-encased beam, with f_{yd} determined using the partial factor γ_{M1} given by EN 1993-1-1, 6.1(1).

(3) For cross-sections in Class 3, M_{Rd} should be determined using expression (6.4), but as the design hogging bending moment that causes either a tensile stress f_{sd} in the reinforcement or a compression stress f_{yd} in the extreme bottom fibre of the steel section, whichever is the smaller; f_{yd} should be determined using the partial factor γ_{M1} given by EN 1993-1-1, 6.1(1).

(4) The relative slenderness $\bar{\lambda}_{\mathrm{LT}}$ may be calculated by:

$$\bar{\lambda}_{\mathrm{LT}} = \sqrt{\frac{M_{\mathrm{Rk}}}{M_{\mathrm{cr}}}} \tag{6.7}$$

where:

M_{Rk} is the resistance moment of the composite section using the characteristic material properties;

M_{cr} is the elastic critical moment for lateral-torsional buckling determined at the internal support of the relevant span where the hogging bending moment is greatest.

(5) Where the same slab is also attached to one or more supporting steel members approximately parallel to the composite beam considered and the conditions 6.4.3(c), (e) and (f) are satisfied, the calculation of the elastic critical moment M_{cr} may be based on the "continuous inverted U-frame" model. As shown in Figure 6.11, this model takes into account the lateral displacement of the bottom flange causing bending of the steel web, and the rotation of the top flange that is resisted by bending of the slab.

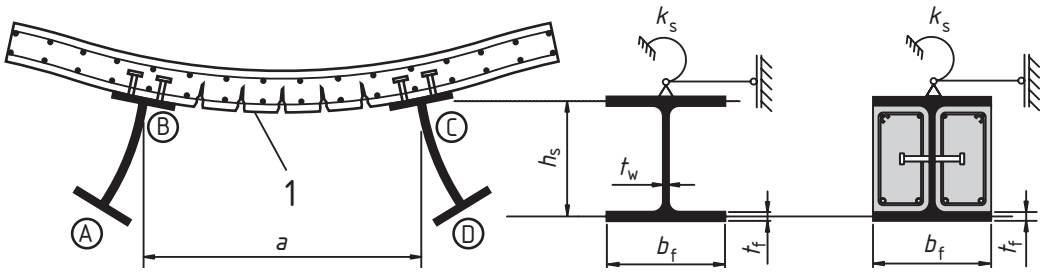

Key

1 cracks

Figure 6.11 : Inverted-U frame ABCD resisting lateral-torsional buckling

(6) At the level of the top steel flange, a rotational stiffness k_s per unit length of steel beam may be adopted to represent the U-frame model by a beam alone:

$$k_s = \frac{k_1 k_2}{k_1 + k_2} \tag{6.8}$$

where:

k_1 is the flexural stiffness of the cracked concrete or composite slab in the direction transverse to the steel beam, which may be taken as:

$$k_1 = \alpha (EI)_2 / a \tag{6.9}$$

where $\alpha = 2$ for k_1 for an edge beam, with or without a cantilever, and $\alpha = 3$ for an inner beam. For inner beams in a floor with four or more similar beams, $\alpha = 4$ may be used;

a is the spacing between the parallel beams;

$(EI)_2$ is the "cracked" flexural stiffness per unit width of the concrete or composite slab, taken as the lower of the value at mid-span, for sagging bending, and the value at the supporting steel section, for hogging bending;

k_2 is the flexural stiffness of the steel web, to be taken as:

$$k_2 = \frac{E_a t_w^3}{4(1-\nu_a^2)h_s} \tag{6.10}$$

for an uncased steel beam,

where :

ν_a is Poisson's ratio for structural steel and h_s and t_w are defined in Figure 6.11.

(7) For a steel beam with partial encasement in accordance with 5.5.3(2), the flexural stiffness k_2 may take account of the encasement and be calculated by:

$$k_2 = \frac{E_a t_w b_c^2}{16 h_s (1 + 4 n t_w / b_c)} \tag{6.11}$$

where:

n is the modular ratio for long-term effects according to 5.4.2.2, and

b_c is the width of the concrete encasement, see Figure 6.8.

(8) In the U-frame model, the favourable effect of the St. Venant torsional stiffness $G_a I_{at}$ of the steel section may be taken into account for the calculation of M_{cr}.

(9) For a partially-encased steel beam with encasement reinforced either with open stirrups attached to the web or with closed stirrups, the torsional stiffness of the encasement may be added to the value $G_a I_{at}$ for the steel section. This additional torsional stiffness should be taken as $G_c I_{ct}$ /10, where G_c is the shear modulus for concrete, which may be taken as $0{,}3E_a / n$ (where n is the modular ratio for long-term effects), and I_{ct} is the St. Venant torsion constant of the encasement, assuming it to be un-cracked and of breadth equal to the overall width of the encasement.

6.4.3 Simplified verification for buildings without direct calculation

(1) A continuous beam (or a beam within a frame that is composite throughout its length) with Class 1, 2 or 3 cross-sections may be designed without additional lateral bracing when the following conditions are satisfied:

a) Adjacent spans do not differ in length by more than 20% of the shorter span. Where there is a cantilever, its length does not exceed 15% of that of the adjacent span.

b) The loading on each span is uniformly distributed, and the design permanent load exceeds 40% of the total design load.

c) The top flange of the steel member is attached to a reinforced concrete or composite slab by shear connectors in accordance with 6.6.

d) The same slab is also attached to another supporting member approximately parallel to the composite beam considered, to form an inverted-U frame as illustrated in Figure 6.11.

e) If the slab is composite, it spans between the two supporting members of the inverted-U frame considered.

f) At each support of the steel member, its bottom flange is laterally restrained and its web is stiffened. Elsewhere, the web may be un-stiffened.

g) If the steel member is an IPE section or an HE section that is not partially encased, its depth h does not exceed the limit given in Table 6.1.

h) If the steel member is partially encased in concrete according to 5.5.3(2), its depth h does not exceed the limit given in Table 6.1 by more than 200 mm for steel grades up to S355 and by 150 mm for grades S420 and S460.

Note: Provisions for other types of steel section may be given in the National Annex.

Table 6.1 : Maximum depth *h* (mm) of uncased steel member for which clause 6.4.3 is applicable

Steel member	Nominal steel grade			
	S 235	S 275	S 355	S 420 and S 460
IPE	600	550	400	270
HE	800	700	650	500

6.5 Transverse forces on webs

6.5.1 General

(1) The rules given in EN 1993-1-5, 6 to determine the design resistance of an unstiffened or stiffened web to transverse forces applied through a flange are applicable to the non-composite steel flange of a composite beam, and to the adjacent part of the web.

(2) If the transverse force acts in combination with bending and axial force, the resistance should be verified according to EN 1993-1-5, 7.2.

(3) For buildings, at an internal support of a beam designed using an effective web in Class 2 in accordance with 5.5.2(3), transverse stiffening should be provided unless it has been verified that the un-stiffened web has sufficient resistance to crippling and buckling.

6.5.2 Flange-induced buckling of webs

(1) EN 1993-1-5, 8 is applicable provided that area A_{fc} is taken equal to the area of the non-composite steel flange or the transformed area of the composite steel flange taking into account the modular ratio for short-term loading, whichever is the smaller.

6.6 Shear connection

6.6.1 General

6.6.1.1 Basis of design

(1) Clause 6.6 is applicable to composite beams and, as appropriate, to other types of composite member.

(2)P Shear connection and transverse reinforcement shall be provided to transmit the longitudinal shear force between the concrete and the structural steel element, ignoring the effect of natural bond between the two.

(3)P Shear connectors shall have sufficient deformation capacity to justify any inelastic redistribution of shear assumed in design.

(4)P Ductile connectors are those with sufficient deformation capacity to justify the assumption of ideal plastic behaviour of the shear connection in the structure considered.

(5) A connector may be taken as ductile if the characteristic slip capacity δ_{uk} is at least 6mm.

Note: An evaluation of δ_{uk} is given in Annex B.

(6)P Where two or more different types of shear connection are used within the same span of a beam, account shall be taken of any significant difference in their load-slip properties.

(7)P Shear connectors shall be capable of preventing separation of the concrete element from the steel element, except where separation is prevented by other means.

(8) To prevent separation of the slab, shear connectors should be designed to resist a nominal ultimate tensile force, perpendicular to the plane of the steel flange, of at least 0,1 times the design ultimate shear resistance of the connectors. If necessary they should be supplemented by anchoring devices.

(9) Headed stud shear connectors in accordance with 6.6.5.7 may be assumed to provide sufficient resistance to uplift, unless the shear connection is subjected to direct tension.

(10)P Longitudinal shear failure and splitting of the concrete slab due to concentrated forces applied by the connectors shall be prevented.

(11) If the detailing of the shear connection is in accordance with the appropriate provisions of 6.6.5 and the transverse reinforcement is in accordance with 6.6.6, compliance with 6.6.1.1(10) may be assumed.

(12) Where a method of interconnection, other than the shear connectors included in 6.6, is used to transfer shear between a steel element and a concrete element, the behaviour assumed in design should be based on tests and supported by a conceptual model. The design of the composite member should conform to the design of a similar member employing shear connectors included in 6.6, in so far as practicable.

(13) For buildings, the number of connectors should be at least equal to the total design shear force for the ultimate limit state, determined according to 6.6.2, divided by the design resistance of a single connector P_{Rd}. For stud connectors the design resistance should be determined according to 6.6.3 or 6.6.4, as appropriate.

(14)P If all cross-sections are in Class 1 or Class 2, in buildings partial shear connection may be used for beams. The number of connectors shall then be determined by a partial connection theory taking into account the deformation capacity of the shear connectors.

6.6.1.2 Limitation on the use of partial shear connection in beams for buildings

(1) Headed studs with an overall length after welding not less than 4 times the diameter, and with a shank of nominal diameter not less than 16 mm and not greater than 25 mm, may be considered as ductile within the following limits for the degree of shear connection, which is defined by the ratio $\eta = n / n_f$:

For steel sections with equal flanges:

$$L_e \leq 25: \qquad \eta \geq 1 - \left(\frac{355}{f_y}\right)(0{,}75 - 0{,}03\, L_e), \qquad \eta \geq 0{,}4 \tag{6.12}$$

$$L_e > 25: \qquad \eta \geq 1 \tag{6.13}$$

For steel sections having a bottom flange with an area equal to three times the area of the top flange:

$$L_e \leq 20: \qquad \eta \geq 1 - \left(\frac{355}{f_y}\right)(0{,}30 - 0{,}015\, L_e), \qquad \eta \geq 0{,}4 \tag{6.14}$$

$$L_e > 20: \qquad \eta \geq 1 \tag{6.15}$$

where:

L_e is the distance in sagging bending between points of zero bending moment in metres; for typical continuous beams, L_e may be assumed to be as shown in Figure 5.1;

n_f is the number of connectors for full shear connection determined for that length of beam in accordance with 6.6.1.1(13) and 6.6.2.2(2);

n is the number of shear connectors provided within that same length.

(2) For steel sections having a bottom flange with an area exceeding the area of the top flange but less than three times that area, the limit for η may be determined from expressions (6.12) – (6.15) by linear interpolation.

(3) Headed stud connectors may be considered as ductile over a wider range of spans than given in (1) above where:

(a) the studs have an overall length after welding not less than 76 mm, and a shank of nominal diameter of 19 mm,

(b) the steel section is a rolled or welded I or H with equal flanges,

(c) the concrete slab is composite with profiled steel sheeting that spans perpendicular to the beam and the concrete ribs are continuous across it,

(d) there is one stud per rib of sheeting, placed either centrally within the rib or alternately on the left side and on the right side of the trough throughout the length of the span,

(e) for the sheeting $b_0 / h_p \geq 2$ and $h_p \leq 60$ mm, where the notation is as in Figure 6.13 and

(f) the force N_c is calculated in accordance with the simplified method given in Figure 6.5.

Where these conditions are satisfied, the ratio η should satisfy:

$$L_e \leq 25: \qquad \eta \geq 1 - \left(\frac{355}{f_y}\right)(1{,}0 - 0{,}04\, L_e), \qquad \eta \geq 0{,}4 \tag{6.16}$$

$$L_e > 25: \qquad \eta \geq 1 \tag{6.17}$$

Note: The requirements in 6.6.1.2 are derived for uniform spacing of shear connectors.

6.6.1.3 Spacing of shear connectors in beams for buildings

(1)P The shear connectors shall be spaced along the beam so as to transmit longitudinal shear and to prevent separation between the concrete and the steel beam, considering an appropriate distribution of design longitudinal shear force.

(2) In cantilevers and hogging moment regions of continuous beams, tension reinforcement should be curtailed to suit the spacing of the shear connectors and should be adequately anchored.

(3) Ductile connectors may be spaced uniformly over a length between adjacent critical cross-sections as defined in 6.1.1 provided that:

– all critical sections in the span considered are in Class 1 or Class 2,

– η satisfies the limit given by 6.6.1.2 and

– the plastic resistance moment of the composite section does not exceed 2,5 times the plastic resistance moment of the steel member alone.

(4) If the plastic resistance moment exceeds 2,5 times the plastic resistance moment of the steel member alone, additional checks on the adequacy of the shear connection should be made at intermediate points approximately mid-way between adjacent critical cross-sections.

(5) The required number of shear connectors may be distributed between a point of maximum sagging bending moment and an adjacent support or point of maximum hogging moment, in accordance with the longitudinal shear calculated by elastic theory for the loading considered. Where this is done, no additional checks on the adequacy of the shear connection are required.

6.6.2 Longitudinal shear force in beams for buildings

6.6.2.1 Beams in which non-linear or elastic theory is used for resistances of one or more cross-sections

(1) If non-linear or elastic theory is applied to cross-sections, the longitudinal shear force should be determined in a manner consistent with 6.2.1.4 or 6.2.1.5 respectively.

6.6.2.2 Beams in which plastic theory is used for resistance of cross sections

(1)P The total design longitudinal shear shall be determined in a manner consistent with the design bending resistance, taking account of the difference in the normal force in concrete or structural steel over a critical length.

(2) For full shear connection, reference should be made to 6.2.1.2, or 6.3.2, as appropriate.

(3) For partial shear connection, reference should be made to 6.2.1.3 or 6.3.2, as appropriate.

6.6.3 Headed stud connectors in solid slabs and concrete encasement

6.6.3.1 Design resistance

(1) The design shear resistance of a headed stud automatically welded in accordance with EN 14555 should be determined from:

$$P_{\mathrm{Rd}} = \frac{0{,}8\, f_{\mathrm{u}}\, \pi\, d^2 / 4}{\gamma_{\mathrm{V}}} \tag{6.18}$$

or:

$$P_{\mathrm{Rd}} = \frac{0{,}29\, \alpha d^2 \sqrt{f_{\mathrm{ck}} E_{\mathrm{cm}}}}{\gamma_{\mathrm{V}}} \tag{6.19}$$

whichever is smaller, with:

$$\alpha = 0{,}2\left(\frac{h_{\mathrm{sc}}}{d} + 1\right) \quad \text{for } 3 \le h_{\mathrm{sc}} / d \le 4 \tag{6.20}$$

$$\alpha = 1 \quad \text{for } h_{\mathrm{sc}} / d > 4 \tag{6.21}$$

where:

γ_{V} is the partial factor;

d is the diameter of the shank of the stud, 16 mm ≤ d ≤ 25 mm;

f_{u} is the specified ultimate tensile strength of the material of the stud but not greater than 500 N/mm^2;

f_{ck} is the characteristic cylinder compressive strength of the concrete at the age considered, of density not less than 1750 kg/m^3;

h_{sc} is the overall nominal height of the stud.

Note: The value for γ_V may be given in the National Annex. The recommended value for γ_V is 1,25.

(2) The weld collars should comply with the requirements of EN 13918.

(3) Where studs are arranged in a way such that splitting forces occur in the direction of the slab thickness, (1) is not applicable.

Note: For buildings, further information may be given in the National Annex.

6.6.3.2 Influence of tension on shear resistance

(1) Where headed stud connectors are subjected to direct tensile force in addition to shear, the design tensile force per stud F_{ten} should be calculated.

(2) If $F_{ten} \leq 0{,}1P_{Rd}$, where P_{Rd} is the design shear resistance defined in 6.6.3.1, the tensile force may be neglected.

(3) If $F_{ten} > 0{,}1P_{Rd}$, the connection is not within the scope of EN 1994.

6.6.4 Design resistance of headed studs used with profiled steel sheeting in buildings

6.6.4.1 Sheeting with ribs parallel to the supporting beams

(1) The studs are located within a region of concrete that has the shape of a haunch, see Figure 6.12. Where the sheeting is continuous across the beam, the width of the haunch b_0 is equal to the width of the trough as given in Figure 9.2. Where the sheeting is not continuous, b_0 is defined in a similar way as given in Figure 6.12. The depth of the haunch should be taken as h_p, the overall depth of the sheeting excluding embossments.

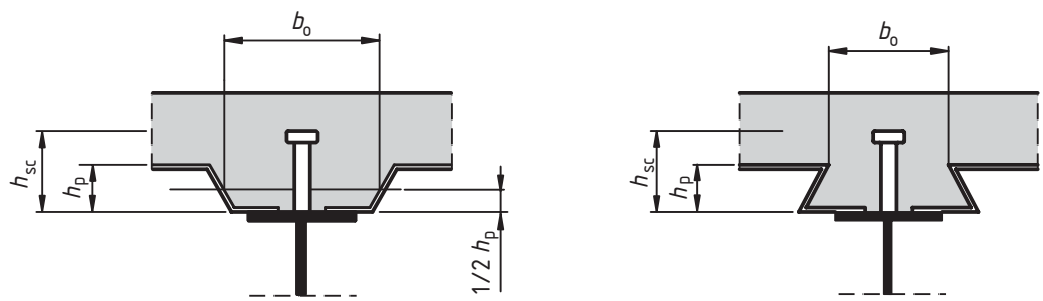

Figure 6.12 : Beam with profiled steel sheeting parallel to the beam

(2) The design shear resistance should be taken as the resistance in a solid slab, see 6.6.3.1, multiplied by the reduction factor k_ℓ given by the following expression:

$$k_\ell = 0{,}6\,\frac{b_0}{h_p}\left(\frac{h_{sc}}{h_p} - 1\right) \leq 1{,}0 \qquad (6.22)$$

where:

h_{sc} is the overall height of the stud, but not greater than h_p + 75 mm.

(3) Where the sheeting is not continuous across the beam, and is not appropriately anchored to the beam, that side of the haunch and its reinforcement should satisfy 6.6.5.4.

Note: Means to achieve appropriate anchorage may be given in the National Annex.

6.6.4.2 Sheeting with ribs transverse to the supporting beams

(1) Provided that the conditions given in (2) and (3) are satisfied, the design shear resistance should be taken as the resistance in a solid slab, calculated as given by 6.6.3.1 (except that f_u should not be taken as greater than 450 N/mm^2) multiplied by the reduction factor k_t given by:

$$k_t = \frac{0{,}7}{\sqrt{n_r}} \frac{b_0}{h_p} \left(\frac{h_{sc}}{h_p} - 1 \right) \tag{6.23}$$

where:

n_r is the number of stud connectors in one rib at a beam intersection, not to exceed 2 in computations, and other symbols are as defined in Figure 6.13.

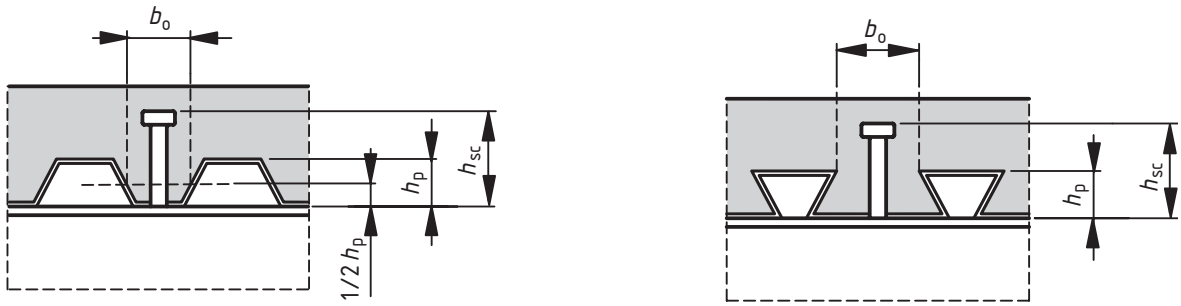

Figure 6.13 : Beam with profiled steel sheeting transverse to the beam

(2) The factor k_t should not be taken greater than the appropriate value $k_{t,max}$ given in Table 6.2.

(3) The values for k_t given by (1) and (2) are applicable provided that:

- the studs are placed in ribs with a height h_p not greater than 85 mm and a width b_0 not less than h_p and
- for through deck welding, the diameter of the studs is not greater than 20mm, or
- for holes provided in the sheeting, the diameter of the studs is not greater than 22mm.

Table 6.2 : Upper limits $k_{t,max}$ for the reduction factor k_t

Number of stud connectors per rib	Thickness *t* of sheet (mm)	Studs not exceeding 20 mm in diameter and welded through profiled steel sheeting	Profiled sheeting with holes and studs 19 mm or 22mm in diameter
$n_r = 1$	≤ 1,0	0,85	0,75
	> 1,0	1,0	0,75
$n_r = 2$	≤ 1,0	0,70	0,60
	> 1,0	0,8	0,60

6.6.4.3 Biaxial loading of shear connectors

(1) Where the shear connectors are provided to produce composite action both for the beam and for the composite slab, the combination of forces acting on the stud should satisfy the following:

$$\frac{F_\ell^2}{P_{\ell,\mathrm{Rd}}^2} + \frac{F_\mathrm{t}^2}{P_{\mathrm{t,Rd}}^2} \leq 1 \qquad (6.24)$$

where:

F_ℓ is the design longitudinal force caused by composite action in the beam;

F_t is the design transverse force caused by composite action in the slab, see Section 9;

$P_{\ell,\mathrm{Rd}}$ and $P_{\mathrm{t,Rd}}$ are the corresponding design shear resistances of the stud.

6.6.5 Detailing of the shear connection and influence of execution

6.6.5.1 Resistance to separation

(1) The surface of a connector that resists separation forces (for example, the underside of the head of a stud) should extend not less than 30 mm clear above the bottom reinforcement, see Figure 6.14.

6.6.5.2 Cover and concreting for buildings

(1)P The detailing of shear connectors shall be such that concrete can be adequately compacted around the base of the connector.

(2) If cover over the connector is required, the nominal cover should be:

a) not less than 20 mm, or

b) as recommended by EN 1992-1-1, Table 4.4 for reinforcing steel, less 5 mm,

whichever is the greater.

(3) If cover is not required the top of the connector may be flush with the upper surface of the concrete slab.

(4) In execution, the rate and sequence of concreting should be required to be such that partly matured concrete is not damaged as a result of limited composite action occurring from deformation of the steel beams under subsequent concreting operations. Wherever possible, deformation should not be imposed on a shear connection until the concrete has reached a cylinder strength of at least 20 N/mm^2.

6.6.5.3 Local reinforcement in the slab

(1) Where the shear connection is adjacent to a longitudinal edge of a concrete slab, transverse reinforcement provided in accordance with 6.6.6 should be fully anchored in the concrete between the edge of the slab and the adjacent row of connectors.

(2) To prevent longitudinal splitting of the concrete flange caused by the shear connectors, the following additional recommendations should be applied where the distance from the edge of the concrete flange to the centreline of the nearest row of shear connectors is less than 300 mm:

a) transverse reinforcement should be supplied by U-bars passing around the shear connectors,

b) where headed studs are used as shear connectors, the distance from the edge of the concrete flange to the centre of the nearest stud should not be less than 6*d*, where *d* is the nominal diameter of the stud, and the U-bars should be not less than 0,5*d* in diameter and

c) the U-bars should be placed as low as possible while still providing sufficient bottom cover.

(3)P At the end of a composite cantilever, sufficient local reinforcement shall be provided to transfer forces from the shear connectors to the longitudinal reinforcement.

6.6.5.4 Haunches other than formed by profiled steel sheeting

(1) Where a concrete haunch is used between the steel section and the soffit of the concrete slab, the sides of the haunch should lie outside a line drawn at 45° from the outside edge of the connector, see Figure 6.14.

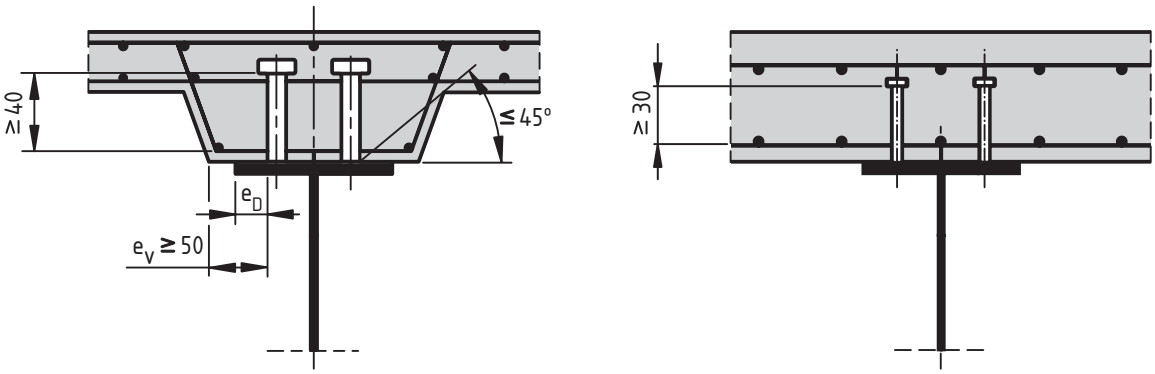

Figure 6.14 : Detailing

(2) The nominal concrete cover from the side of the haunch to the connector should be not less than 50 mm.

(3) Transverse reinforcing bars sufficient to satisfy the requirements of 6.6.6 should be provided in the haunch at not less than 40 mm clear below the surface of the connector that resists uplift.

6.6.5.5 Spacing of connectors

(1)P Where it is assumed in design that the stability of either the steel or the concrete member is ensured by the connection between the two, the spacing of the shear connectors shall be sufficiently close for this assumption to be valid.

(2) Where a steel compression flange that would otherwise be in a lower class is assumed to be in Class 1 or Class 2 because of restraint from shear connectors, the centre-to-centre spacing of the shear connectors in the direction of compression should be not greater than the following limits:

- where the slab is in contact over the full length (e.g. solid slab): $22\ t_f\sqrt{235/f_y}$
- where the slab is not in contact over the full length (e.g. slab with ribs transverse to the beam): $15\ t_f\sqrt{235/f_y}$

where:

t_f is the thickness of the flange;

f_y is the nominal yield strength of the flange in N/mm^2.

In addition, the clear distance from the edge of a compression flange to the nearest line of shear connectors should be not greater than $9\ t_f\sqrt{235/f_y}$.

(3) In buildings, the maximum longitudinal centre-to-centre spacing of shear connectors should be not greater than 6 times the total slab thickness nor 800 mm.

6.6.5.6 Dimensions of the steel flange

(1)P The thickness of the steel plate or flange to which a connector is welded shall be sufficient to allow proper welding and proper transfer of load from the connector to the plate without local failure or excessive deformation.

(2) In buildings, the distance e_D between the edge of a connector and the edge of the flange of the beam to which it is welded, see Figure 6.14, should be not less than 20 mm.

6.6.5.7 Headed stud connectors

(1) The overall height of a stud should be not less than 3*d*, where *d* is the diameter of the shank.

(2) The head should have a diameter of not less than 1,5*d* and a depth of not less than 0,4*d*.

(3) For elements in tension and subjected to fatigue loading, the diameter of a welded stud should not exceed 1,5 times the thickness of the flange to which it is welded, unless test information is provided to establish the fatigue resistance of the stud as a shear connector. This applies also to studs directly over a web.

(4) The spacing of studs in the direction of the shear force should be not less than 5*d*; the spacing in the direction transverse to the shear force should be not less than 2,5*d* in solid slabs and 4*d* in other cases.

(5) Except when the studs are located directly over the web, the diameter of a welded stud should be not greater than 2,5 times the thickness of that part to which it is welded, unless test information is provided to establish the resistance of the stud as a shear connector.

6.6.5.8 Headed studs used with profiled steel sheeting in buildings

(1) The nominal height of a connector should extend not less than $2d$ above the top of the steel deck, where d is the diameter of the shank.

(2) The minimum width of the troughs that are to be filled with concrete should be not less than 50 mm.

(3) Where the sheeting is such that studs cannot be placed centrally within a trough, they should be placed alternately on the two sides of the trough, throughout the length of the span.

6.6.6 Longitudinal shear in concrete slabs

6.6.6.1 General

(1)P Transverse reinforcement in the slab shall be designed for the ultimate limit state so that premature longitudinal shear failure or longitudinal splitting shall be prevented.

(2)P The design longitudinal shear stress for any potential surface of longitudinal shear failure within the slab v_{Ed} shall not exceed the design longitudinal shear strength of the shear surface considered.

(3) The length of the shear surface b-b shown in Figure 6.15 should be taken as equal to $2h_{sc}$ plus the head diameter for a single row of stud shear connectors or staggered stud connectors, or as equal to $(2h_{sc} + s_t)$ plus the head diameter for stud shear connectors arranged in pairs, where h_{sc} is the height of the studs and s_t is the transverse spacing centre-to-centre of the studs.

(4) The design longitudinal shear per unit length of beam on a shear surface should be determined in accordance with 6.6.2 and be consistent with the design and spacing of the shear connectors. Account may be taken of the variation of longitudinal shear across the width of the concrete flange.

(5) For each type of shear surface considered, the design longitudinal shear stress v_{Ed} should be determined from the design longitudinal shear per unit length of beam, taking account of the number of shear planes and the length of the shear surface.

6.6.6.2 Design resistance to longitudinal shear

(1) The design shear strength of the concrete flange (shear planes a-a illustrated in Figure 6.15) should be determined in accordance with EN 1992-1-1, 6.2.4.

(2) In the absence of a more accurate calculation the design shear strength of any surface of potential shear failure in the flange or a haunch may be determined from EN 1992-1-1, 6.2.4(4). For a shear surface passing around the shear connectors (e.g. shear surface b-b in Figure 6.15), the dimension h_f should be taken as the length of the shear surface.

(3) The effective transverse reinforcement per unit length, A_{sf} / s_f in EN 1992-1-1, should be as shown in Figure 6.15, in which A_b, A_t and A_{bh} are areas of reinforcement per unit length of beam anchored in accordance with EN 1992-1-1, 8.4 for longitudinal reinforcement.

(4) Where a combination of pre-cast elements and in-situ concrete is used, the resistance to longitudinal shear should be determined in accordance with EN 1992-1-1, 6.2.5.

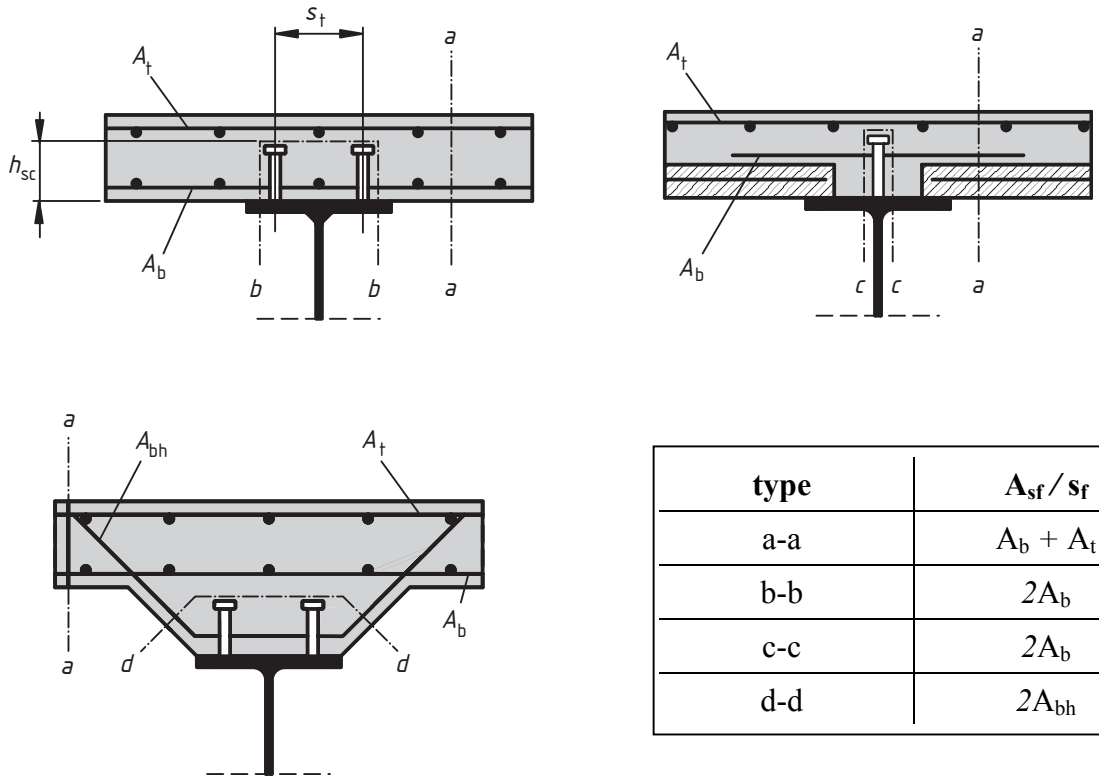

type	A_{sf} / s_f
a-a	$A_b + A_t$
b-b	$2A_b$
c-c	$2A_b$
d-d	$2A_{bh}$

Figure 6.15 : Typical potential surfaces of shear failure

6.6.6.3 Minimum transverse reinforcement

(1) The minimum area of reinforcement should be determined in accordance with EN 1992-1-1, 9.2.2(5) using definitions appropriate to transverse reinforcement.

6.6.6.4 Longitudinal shear and transverse reinforcement in beams for buildings

(1) Where profiled steel sheeting is used and the shear surface passes through the depth of the slab (e.g. shear surface a-a in Figure 6.16), the dimension h_f should be taken as the thickness of the concrete above the sheeting.

(2) Where profiled steel sheeting is used transverse to the beam and the design resistances of the studs are determined using the appropriate reduction factor k_t as given in 6.6.4.2, it is not necessary to consider shear surfaces of type b-b in Figure 6.16.

(3) Unless verified by tests, for surfaces of type c-c in Figure 6.16 the depth of the sheeting should not be included in h_f.

(4) Where profiled steel sheeting with mechanical or frictional interlock and with ribs transverse to the beam is continuous across the top flange of the steel beam, its contribution to the transverse reinforcement for a shear surface of type a-a may be allowed for by replacing expression (6.21) in EN 1992-1-1, 6.2.4(4) by:

$$(A_{sf} f_{yd} / s_f) + A_{pe} f_{yp,d} > v_{Ed} h_f / \cot\theta \qquad (6.25)$$

where:

A_{pe} is the effective cross-sectional area of the profiled steel sheeting per unit length of the beam, see 9.7.2(3); for sheeting with holes, the net area should be used;

$f_{yp,d}$ is its design yield strength.

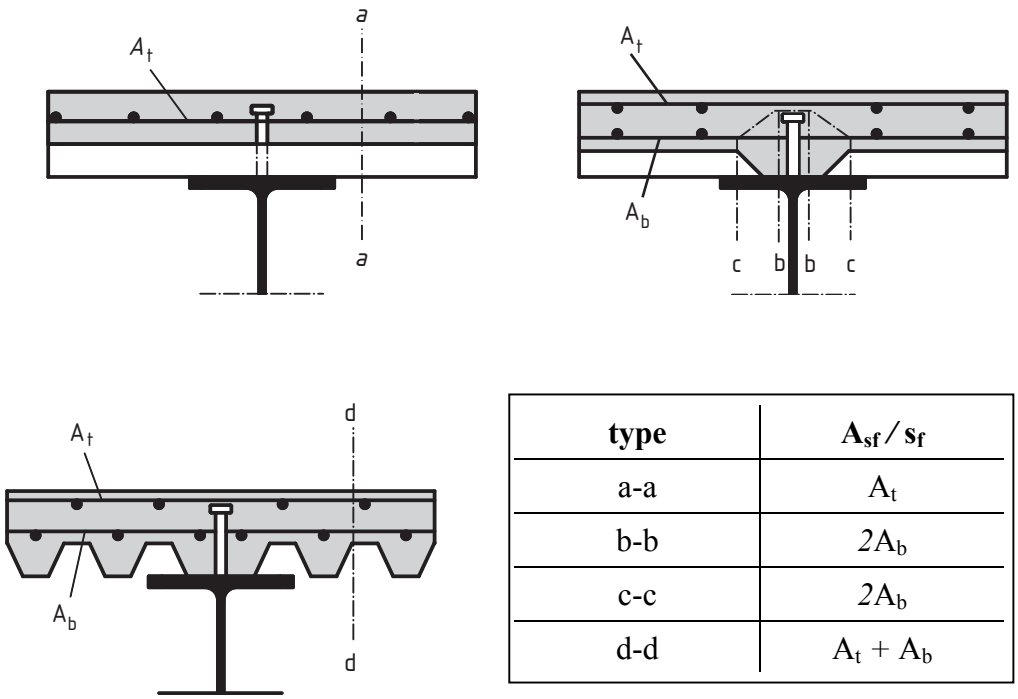

type	A_{sf}/s_f
a-a	A_t
b-b	$2A_b$
c-c	$2A_b$
d-d	$A_t + A_b$

Figure 6.16 : Typical potential surfaces of shear failure where profiled steel sheeting is used

(5) Where the profiled steel sheeting with ribs transverse to the beam is discontinuous across the top flange of the steel beam, and stud shear connectors are welded to the steel beam directly through the profiled steel sheets, the term $A_p f_{yp,d}$ in expression (6.25) should be replaced by:

$$P_{pb,Rd} / s \quad \text{but} \quad \leq A_p f_{yp,d} \tag{6.26}$$

where:

$P_{pb,Rd}$ is the design bearing resistance of a headed stud welded through the sheet according to 9.7.4;

s is the longitudinal spacing centre-to-centre of the studs effective in anchoring the sheeting.

(6) With profiled steel sheeting, the requirement for minimum reinforcement relates to the area of concrete above the sheeting.

6.7 Composite columns and composite compression members

6.7.1 General

(1)P Clause 6.7 applies for the design of composite columns and composite compression members with concrete encased sections, partially encased sections and concrete filled rectangular and circular tubes, see Figure 6.17.

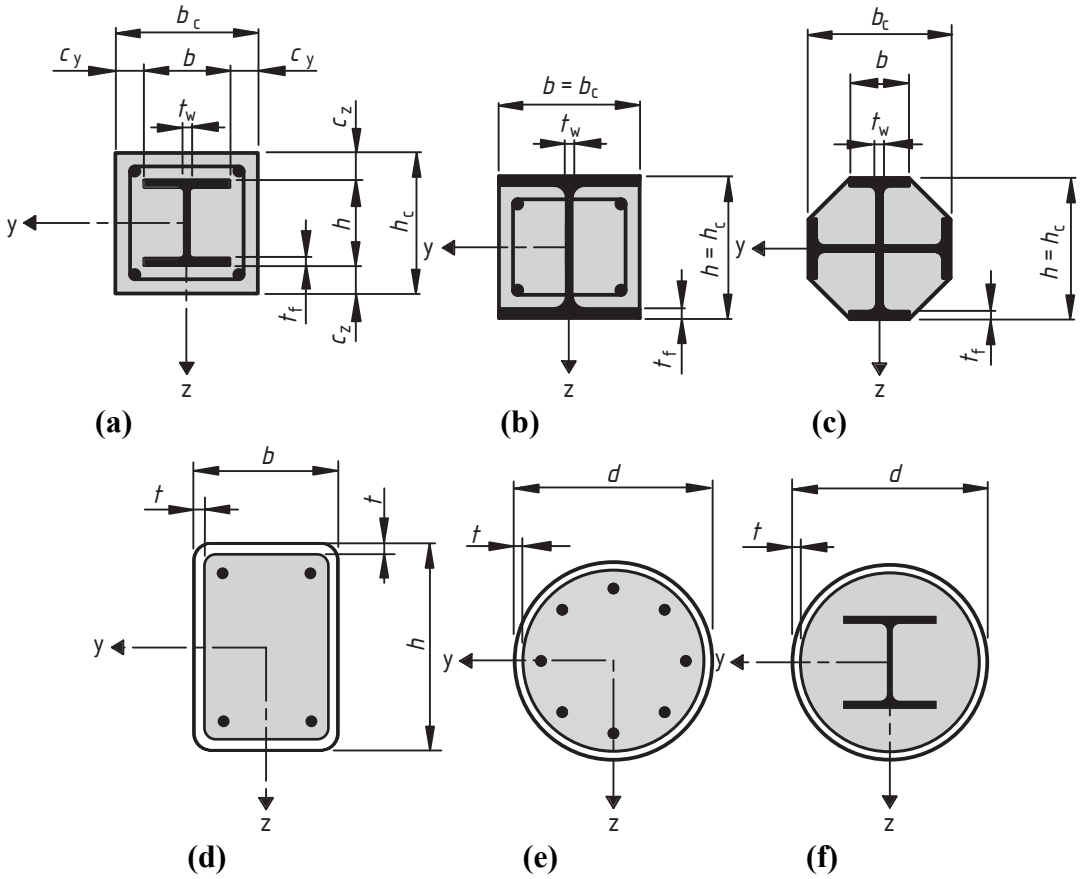

Figure 6.17 : Typical cross-sections of composite columns and notation

(2)P This clause applies to columns and compression members with steel grades S235 to S460 and normal weight concrete of strength classes C20/25 to C50/60.

(3) This clause applies to isolated columns and columns and composite compression members in framed structures where the other structural members are either composite or steel members.

(4) The steel contribution ratio δ should fulfil the following condition:

$$0{,}2 \leq \delta \leq 0{,}9 \qquad (6.27)$$

where:

δ is defined in 6.7.3.3(1).

(5) Composite columns or compression members of any cross-section should be checked for:

- resistance of the member in accordance with 6.7.2 or 6.7.3,
- resistance to local buckling in accordance with (8) and (9) below,
- introduction of loads in accordance with 6.7.4.2 and
- resistance to shear between steel and concrete elements in accordance with 6.7.4.3.

(6) Two methods of design are given:

- a general method in 6.7.2 whose scope includes members with non-symmetrical or non-uniform cross-sections over the column length and
- a simplified method in 6.7.3 for members of doubly symmetrical and uniform cross section over the member length.

(7) For composite compression members subjected to bending moments and normal forces resulting from independent actions, the partial factor γ_F for those internal forces that lead to an increase of resistance should be reduced by 20%.

(8)P The influence of local buckling of the steel section on the resistance shall be considered in design.

(9) The effects of local buckling may be neglected for a steel section fully encased in accordance with 6.7.5.1(2), and for other types of cross-section provided the maximum values of Table 6.3 are not exceeded.

Table 6.3 : Maximum values (*d/t*), (*h/t*) and (b/t_f) with f_y in N/mm^2

Cross-section		Max (*d/t*), max (*h/t*) and max (*b/t*)
Circular hollow steel sections	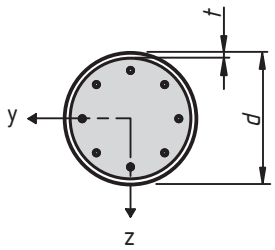	$\max\ (d/t) = 90\dfrac{235}{f_y}$
Rectangular hollow steel sections	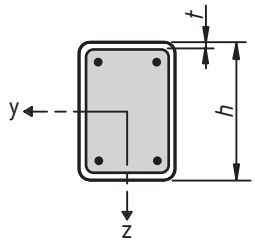	$\max\ (h/t) = 52\sqrt{\dfrac{235}{f_y}}$
Partially encased I-sections	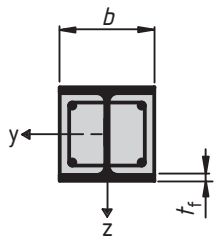	$\max\ (b/t_f) = 44\sqrt{\dfrac{235}{f_y}}$

6.7.2 General method of design

(1)P Design for structural stability shall take account of second-order effects including residual stresses, geometrical imperfections, local instability, cracking of concrete, creep and shrinkage of concrete and yielding of structural steel and of reinforcement. The design shall ensure that instability does not occur for the most unfavourable combination of actions at the ultimate limit

state and that the resistance of individual cross-sections subjected to bending, longitudinal force and shear is not exceeded.

(2)P Second-order effects shall be considered in any direction in which failure might occur, if they affect the structural stability significantly.

(3)P Internal forces shall be determined by elasto-plastic analysis.

(4) Plane sections may be assumed to remain plane. Full composite action up to failure may be assumed between the steel and concrete components of the member.

(5)P The tensile strength of concrete shall be neglected. The influence of tension stiffening of concrete between cracks on the flexural stiffness may be taken into account.

(6)P Shrinkage and creep effects shall be considered if they are likely to reduce the structural stability significantly.

(7) For simplification, creep and shrinkage effects may be ignored if the increase in the first-order bending moments due to creep deformations and longitudinal force resulting from permanent loads is not greater than 10%.

(8) The following stress-strain relationships should be used in the non-linear analysis :

- for concrete in compression as given in EN 1992-1-1, 3.1.5;
- for reinforcing steel as given in EN 1992-1-1, 3.2.7;
- for structural steel as given in EN 1993-1-1, 5.4.3(4).

(9) For simplification, instead of the effect of residual stresses and geometrical imperfections, equivalent initial bow imperfections (member imperfections) may be used in accordance with Table 6.5.

6.7.3 Simplified method of design

6.7.3.1 General and scope

(1) The scope of this simplified method is limited to members of doubly symmetrical and uniform cross-section over the member length with rolled, cold-formed or welded steel sections. The simplified method is not applicable if the structural steel component consists of two or more unconnected sections. The relative slenderness $\bar{\lambda}$ defined in 6.7.3.3 should fulfill the following condition:

$$\bar{\lambda} \leq 2{,}0 \qquad (6.28)$$

(2) For a fully encased steel section, see Figure 6.17a, limits to the maximum thickness of concrete cover that may be used in calculation are:

$$\max c_z = 0{,}3h \qquad \max c_y = 0{,}4\,b \qquad (6.29)$$

(3) The longitudinal reinforcement that may be used in calculation should not exceed 6% of the concrete area.

(4) The ratio of the depth to the width of the composite cross-section should be within the limits 0,2 and 5,0.

6.7.3.2 Resistance of cross sections

(1) The plastic resistance to compression $N_{pl,Rd}$ of a composite cross-section should be calculated by adding the plastic resistances of its components:

$$N_{pl,Rd} = A_a f_{yd} + 0{,}85 A_c f_{cd} + A_s f_{sd} \tag{6.30}$$

Expression (6.30) applies for concrete encased and partially concrete encased steel sections. For concrete filled sections the coefficient 0,85 may be replaced by 1,0.

(2) The resistance of a cross-section to combined compression and bending and the corresponding interaction curve may be calculated assuming rectangular stress blocks as shown in Figure 6.18, taking account of the design shear force V_{Ed} in accordance with (3). The tensile strength of the concrete should be neglected.

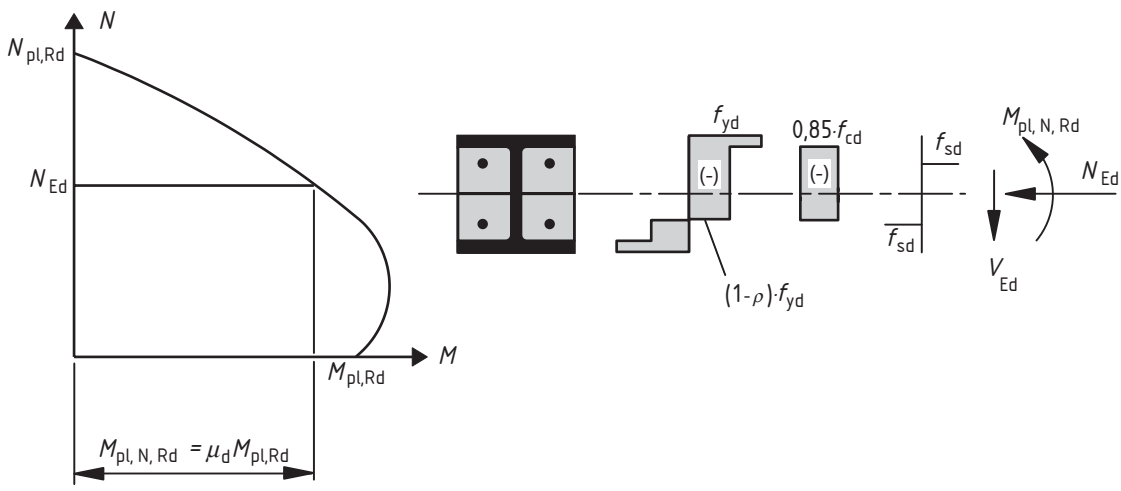

Figure 6.18 : Interaction curve for combined compression and uniaxial bending

(3) The influence of transverse shear forces on the resistance to bending and normal force should be considered when determining the interaction curve, if the shear force $V_{a,Ed}$ on the steel section exceeds 50% of the design shear resistance $V_{pl,a,Rd}$ of the steel section, see 6.2.2.2.

Where $V_{a,Ed} > 0{,}5 V_{pl,a,Rd}$, the influence of the transverse shear on the resistance in combined bending and compression should be taken into account by a reduced design steel strength $(1 - \rho) f_{yd}$ in the shear area A_v in accordance with 6.2.2.4(2) and Figure 6.18.
The shear force $V_{a,Ed}$ should not exceed the resistance to shear of the steel section determined according to 6.2.2. The resistance to shear $V_{c,Ed}$ of the reinforced concrete part should be verified in accordance with EN 1992-1-1, 6.2.

(4) Unless a more accurate analysis is used, V_{Ed} may be distributed into $V_{a,Ed}$ acting on the structural steel and $V_{c,Ed}$ acting on the reinforced concrete section by :

$$V_{a,Ed} = V_{Ed} \frac{M_{pl,a,Rd}}{M_{pl,Rd}} \tag{6.31}$$

$$V_{c,Ed} = V_{Ed} - V_{a,Ed} \tag{6.32}$$

where:

$M_{pl,a,Rd}$ is the plastic resistance moment of the steel section and

$M_{pl,Rd}$ is the plastic resistance moment of the composite section.

For simplification V_{Ed} may be assumed to act on the structural steel section alone.

(5) As a simplification, the interaction curve may be replaced by a polygonal diagram (the dashed line in Figure 6.19). Figure 6.19 shows as an example the plastic stress distribution of a fully encased cross section for the points A to D. $N_{pm,Rd}$ should be taken as 0,85 f_{cd} A_c for concrete encased and partially concrete encased sections, see Figures 6.17(a) – (c), and as f_{cd} A_c for concrete filled sections, see Figures 6.17(d) – (f).

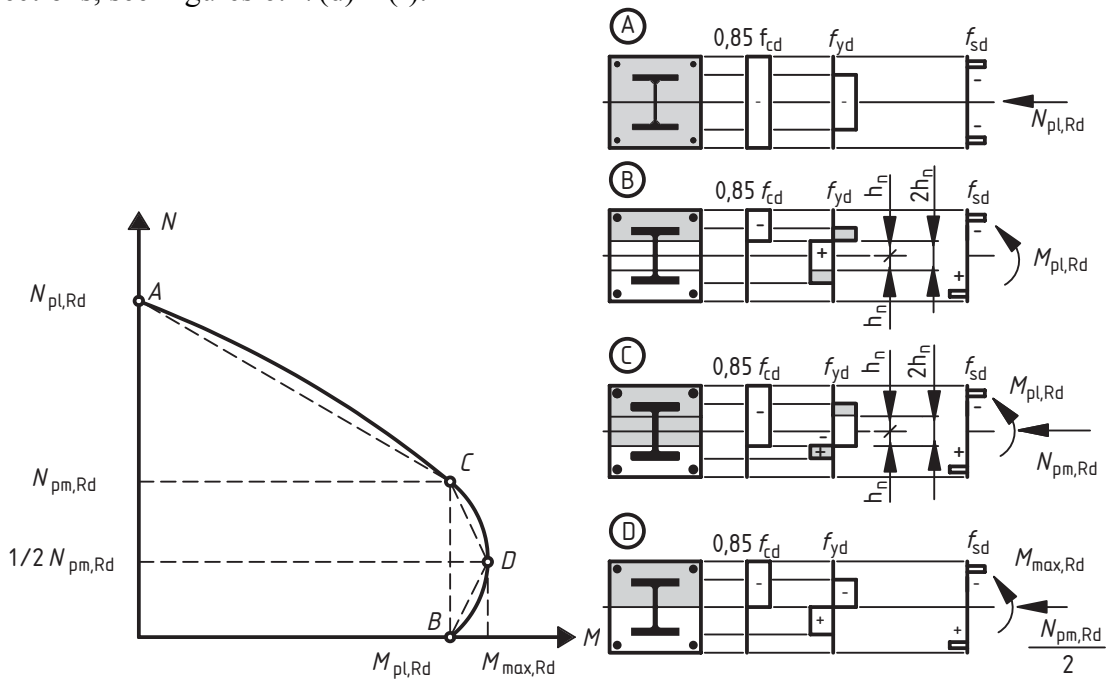

Figure 6.19 : Simplified interaction curve and corresponding stress distributions

(6) For concrete filled tubes of circular cross-section, account may be taken of increase in strength of concrete caused by confinement provided that the relative slenderness $\bar{\lambda}$ defined in 6.7.3.3 does not exceed 0,5 and $e/d < 0{,}1$, where e is the eccentricity of loading given by M_{Ed} / N_{Ed} and d is the external diameter of the column. The plastic resistance to compression may then be calculated from the following expression:

$$N_{pl,Rd} = \eta_a A_a f_{yd} + A_c f_{cd}\left(1 + \eta_c \frac{t}{d}\frac{f_y}{f_{ck}}\right) + A_s f_{sd} \tag{6.33}$$

where:

t is the wall thickness of the steel tube.

For members with $e = 0$ the values $\eta_a = \eta_{ao}$ and $\eta_c = \eta_{co}$ are given by the following expressions:

$$\eta_{ao} = 0{,}25\,(3 + 2\bar{\lambda}) \qquad \text{(but } \leq 1{,}0) \tag{6.34}$$

$$\eta_{co} = 4{,}9 - 18{,}5\bar{\lambda} + 17\bar{\lambda}^2 \qquad \text{(but} \geq 0) \tag{6.35}$$

For members in combined compression and bending with $0 < e/d \leq 0{,}1$, the values η_a and η_c should be determined from (6.36) and (6.37), where η_{ao} and η_{co} are given by (6.34) and (6.35):

$$\eta_a = \eta_{ao} + (1 - \eta_{ao})\,(10\,e/d) \tag{6.36}$$

$$\eta_c = \eta_{co}\,(1 - 10\,e/d) \tag{6.37}$$

For $e/d > 0{,}1$, $\eta_a = 1{,}0$ and $\eta_c = 0$.

6.7.3.3 Effective flexural stiffness, steel contribution ratio and relative slenderness

(1) The steel contribution ratio δ is defined as:

$$\delta = \frac{A_a\, f_{yd}}{N_{pl,Rd}} \tag{6.38}$$

where:

$N_{pl,Rd}$ is the plastic resistance to compression defined in 6.7.3.2(1).

(2) The relative slenderness $\bar{\lambda}$ for the plane of bending being considered is given by:

$$\bar{\lambda} = \sqrt{\frac{N_{pl,Rk}}{N_{cr}}} \tag{6.39}$$

where:

$N_{pl,Rk}$ is the characteristic value of the plastic resistance to compression given by (6.30) if, instead of the design strengths, the characteristic values are used;

N_{cr} is the elastic critical normal force for the relevant buckling mode, calculated with the effective flexural stiffness $(EI)_{eff}$ determined in accordance with (3) and (4).

(3) For the determination of the relative slenderness $\bar{\lambda}$ and the elastic critical force N_{cr}, the characteristic value of the effective flexural stiffness $(EI)_{eff}$ of a cross section of a composite column should be calculated from:

$$(E\,I)_{eff} = E_a I_a + E_s\, I_s + K_e\, E_{cm}\, I_c \tag{6.40}$$

where:

K_e is a correction factor that should be taken as 0,6.

I_a, I_c, and I_s are the second moments of area of the structural steel section, the un-cracked concrete section and the reinforcement for the bending plane being considered.

(4) Account should be taken to the influence of long-term effects on the effective elastic flexural stiffness. The modulus of elasticity of concrete E_{cm} should be reduced to the value $E_{c,eff}$ in accordance with the following expression:

$$E_{c,eff} = E_{cm}\,\frac{1}{1 + (N_{G,Ed} / N_{Ed})\,\varphi_t} \tag{6.41}$$

where:

φ_t is the creep coefficient according to 5.4.2.2(2);

N_{Ed} is the total design normal force;

$N_{G,Ed}$ is the part of this normal force that is permanent.

6.7.3.4 Methods of analysis and member imperfections

(1) For member verification, analysis should be based on second-order linear elastic analysis.

(2) For the determination of the internal forces the design value of effective flexural stiffness $(EI)_{eff,II}$ should be determined from the following expression:

$$(E\,I)_{eff,II} = K_o\,(E_a I_a + E_s I_s + K_{e,II}\,E_{cm}\,I_c) \qquad (6.42)$$

where:

$K_{e,II}$ is a correction factor which should be taken as 0,5;

K_o is a calibration factor which should be taken as 0,9.

Long-term effects should be taken into account in accordance with 6.7.3.3 (4).

(3) Second-order effects need not to be considered where 5.2.1(3) applies and the elastic critical load is determined with the flexural stiffness $(EI)_{eff,II}$ in accordance with (2).

(4) The influence of geometrical and structural imperfections may be taken into account by equivalent geometrical imperfections. Equivalent member imperfections for composite columns are given in Table 6.5, where L is the column length.

(5) Within the column length, second-order effects may be allowed for by multiplying the greatest first-order design bending moment M_{Ed} by a factor k given by:

$$k = \frac{\beta}{1 - N_{Ed} / N_{cr,eff}}\,, \quad \geq 1{,}0 \qquad (6.43)$$

where:

$N_{cr,eff}$ is the critical normal force for the relevant axis and corresponding to the effective flexural stiffness given in 6.7.3.4(2), with the effective length taken as the column length;

β is an equivalent moment factor given in Table 6.4.

6.7.3.5 Resistance of members in axial compression

(1) Members may be verified using second order analysis according to 6.7.3.6 taking into account member imperfections.

(2) For simplification for members in axial compression, the design value of the normal force N_{Ed} should satisfy:

$$\frac{N_{Ed}}{\chi\,N_{pl,Rd}} \leq 1{,}0 \qquad (6.44)$$

where:

$N_{pl,Rd}$ is the plastic resistance of the composite section according to 6.7.3.2(1), but with f_{yd} determined using the partial factor γ_{M1} given by EN 1993-1-1, 6.1(1);

χ is the reduction factor for the relevant buckling mode given in EN 1993-1-1, 6.3.1.2 in terms of the relevant relative slenderness $\bar{\lambda}$.

The relevant buckling curves for cross-sections of composite columns are given in Table 6.5, where ρ_s is the reinforcement ratio A_s / A_c.

Table 6.4 Factors β for the determination of moments to second order theory

Moment distribution	Moment factors β	Comment
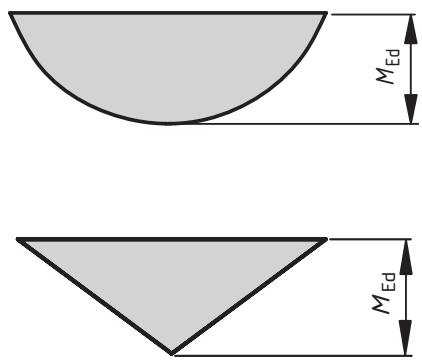	First-order bending moments from member imperfection or lateral load: $\beta = 1{,}0$	M_{Ed} is the maximum bending moment within the column length ignoring second-order effects
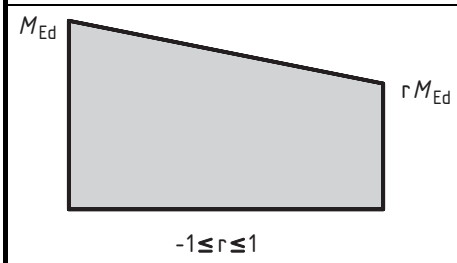	End moments: $\beta = 0{,}66 + 0{,}44r$ but $\beta \geq 0{,}44$	M_{Ed} and $r\,M_{Ed}$ are the end moments from first-order or second-order global analysis

6.7.3.6 Resistance of members in combined compression and uniaxial bending

(1) The following expression based on the interaction curve determined according to 6.7.3.2 (2)-(5) should be satisfied:

$$\frac{M_{Ed}}{M_{pl,N,Rd}} = \frac{M_{Ed}}{\mu_d\, M_{pl,Rd}} \leq \alpha_M \qquad (6.45)$$

where:

M_{Ed} is the greatest of the end moments and the maximum bending moment within the column length, calculated according to 6.7.3.4, including imperfections and second order effects if necessary;

$M_{pl,N,Rd}$ is the plastic bending resistance taking into account the normal force N_{Ed}, given by $\mu_d\, M_{pl,Rd}$, see Figure 6.18;

$M_{pl,Rd}$ is the plastic bending resistance, given by point B in Figure 6.19.

For steel grades between S235 and S355 inclusive, the coefficient α_M should be taken as 0,9 and for steel grades S420 and S460 as 0,8.

Table 6.5 : Buckling curves and member imperfections for composite columns

Cross-section	Limits	Axis of buckling	Buckling curve	Member imperfection
concrete encased section 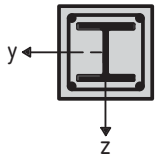		y-y	b	*L*/200
		z-z	c	*L*/150
partially concrete encased section 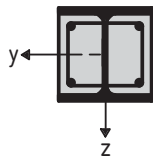		y-y	b	*L*/200
		z-z	c	*L*/150
circular and rectangular hollow steel section 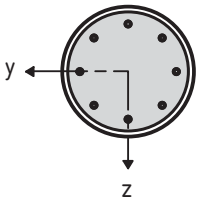	$\rho_s \leq 3\%$	any	a	*L*/300
	$3\% < \rho_s \leq 6\%$	any	b	*L*/200
circular hollow steel sections with additional I-section 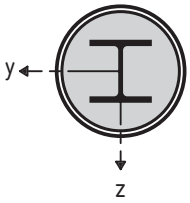		y-y	b	*L*/200
		z-z	b	*L*/200
partially concrete encased section with crossed I-sections 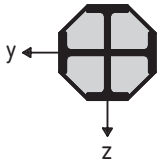		any	b	*L*/200

(2) The value $\mu_d = \mu_{dy}$ or μ_{dz} , see Figure 6.20, refers to the design plastic resistance moment $M_{pl,Rd}$ for the plane of bending being considered. Values μ_d greater than 1,0 should only be used where the bending moment M_{Ed} depends directly on the action of the normal force N_{Ed}, for example where the moment M_{Ed} results from an eccentricity of the normal force N_{Ed}. Otherwise an additional verification is necessary in accordance with clause 6.7.1 (7).

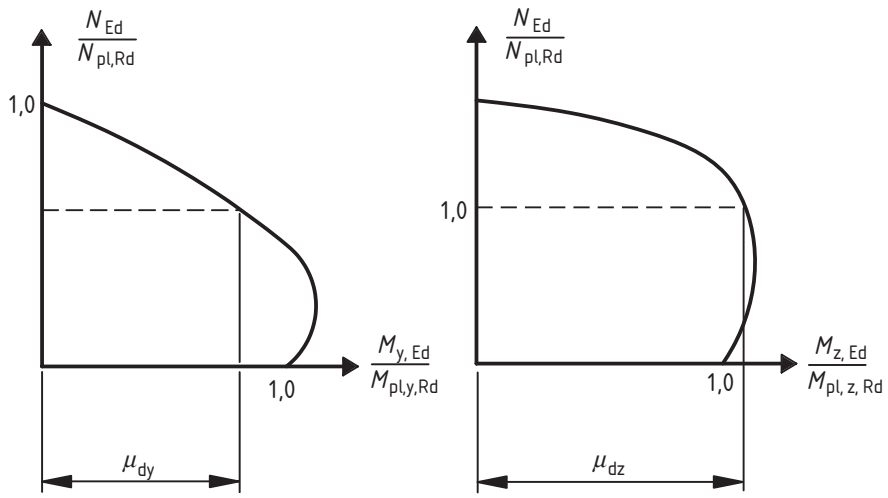

Figure 6.20 : Design for compression and biaxial bending

6.7.3.7 Combined compression and biaxial bending

(1) For composite columns and compression members with biaxial bending the values μ_{dy} and μ_{dz} in Figure 6.20 may be calculated according to 6.7.3.6 separately for each axis. Imperfections should be considered only in the plane in which failure is expected to occur. If it is not evident which plane is the more critical, checks should be made for both planes.

(2) For combined compression and biaxial bending the following conditions should be satisfied for the stability check within the column length and for the check at the end:

$$\frac{M_{y,Ed}}{\mu_{dy} M_{pl,y,Rd}} \leq \alpha_{M,y} \qquad \frac{M_{z,Ed}}{\mu_{dz} M_{pl,z,Rd}} \leq \alpha_{M,z} \tag{6.46}$$

$$\frac{M_{y,Ed}}{\mu_{dy} M_{pl,y,Rd}} + \frac{M_{z,Ed}}{\mu_{dz} M_{pl,z,Rd}} \leq 1{,}0 \tag{6.47}$$

where:

$M_{pl,y,Rd}$ and $M_{pl,z,Rd}$ are the plastic bending resistances of the relevant plane of bending;

$M_{y,Ed}$ and $M_{z,Ed}$ are the design bending moments including second-order effects and imperfections according to 6.7.3.4;

μ_{dy} and μ_{dz} are defined in 6.7.3.6;

$\alpha_M = \alpha_{M,y}$ and $\alpha_M = \alpha_{M,z}$ are given in 6.7.3.6(1).

6.7.4 Shear connection and load introduction

6.7.4.1 General

(1)P Provision shall be made in regions of load introduction for internal forces and moments applied from members connected to the ends and for loads applied within the length to be distributed between the steel and concrete components, considering the shear resistance at the interface between steel and concrete. A clearly defined load path shall be provided that does not involve an amount of slip at this interface that would invalidate the assumptions made in design.

(2)P Where composite columns and compression members are subjected to significant transverse shear, as for example by local transverse loads and by end moments, provision shall be made for the transfer of the corresponding longitudinal shear stress at the interface between steel and concrete.

(3) For axially loaded columns and compression members, longitudinal shear outside the areas of load introduction need not be considered.

6.7.4.2 Load introduction

(1) Shear connectors should be provided in the load introduction area and in areas with change of cross section, if the design shear strength τ_{Rd}, see 6.7.4.3, is exceeded at the interface between steel and concrete. The shear forces should be determined from the change of sectional forces of the steel or reinforced concrete section within the introduction length. If the loads are introduced into the concrete cross section only, the values resulting from an elastic analysis considering creep and shrinkage should be taken into account. Otherwise, the forces at the interface should be determined by elastic theory or plastic theory, to determine the more severe case.

(2) In absence of a more accurate method, the introduction length should not exceed $2d$ or $L/3$, where d is the minimum transverse dimension of the column and L is the column length.

(3) For composite columns and compression members no shear connection need be provided for load introduction by endplates if the full interface between the concrete section and endplate is permanently in compression, taking account of creep and shrinkage. Otherwise the load introduction should be verified according to (5). For concrete filled tubes of circular cross-section the effect caused by the confinement may be taken into account if the conditions given in 6.7.3.2(6) are satisfied using the values η_a and η_c for $\bar{\lambda}$ equal to zero.

(4) Where stud connectors are attached to the web of a fully or partially concrete encased steel I-section or a similar section, account may be taken of the frictional forces that develop from the prevention of lateral expansion of the concrete by the adjacent steel flanges. This resistance may be added to the calculated resistance of the shear connectors. The additional resistance may be assumed to be $\mu P_{Rd}/2$ on each flange and each horizontal row of studs, as shown in Figure 6.21, where μ is the relevant coefficient of friction that may be assumed. For steel sections without painting, μ may be taken as 0,5. P_{Rd} is the resistance of a single stud in accordance with 6.6.3.1. In absence of better information from tests, the clear distance between the flanges should not exceed the values given in Figure 6.21.

(5) If the cross-section is partially loaded (as, for example, Figure 6.22a), the loads may be distributed with a ratio of 1:2,5 over the thickness t_e of the end plate. The concrete stresses should then be limited in the area of the effective load introduction, for concrete filled hollow sections in accordance with (6) and for all other types of cross-sections in accordance with EN 1992-1-1, 6.7.

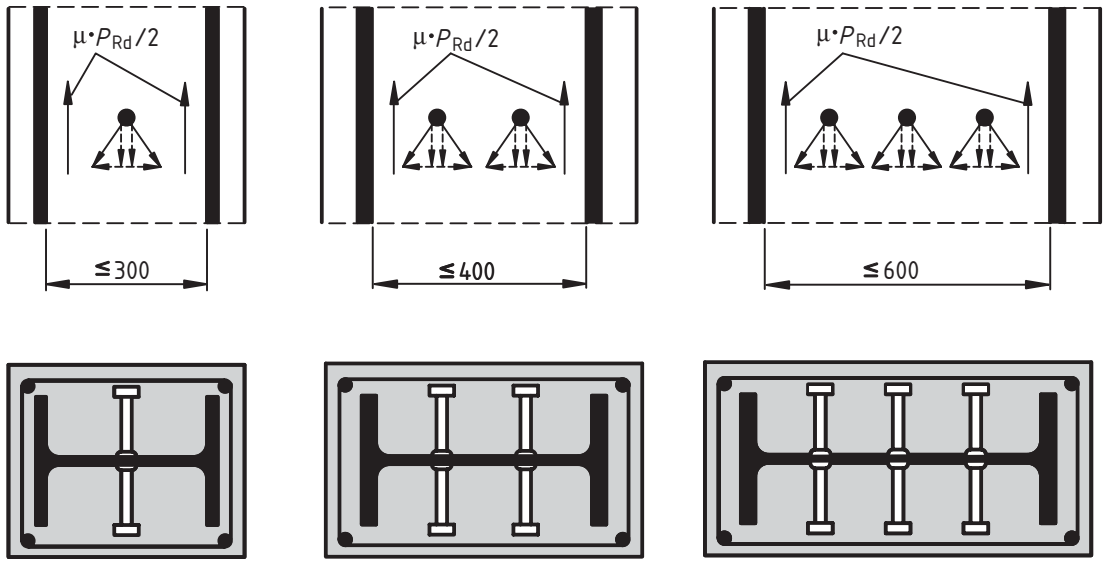

Figure 6.21 : Additional frictional forces in composite columns by use of headed studs

(6) If the concrete in a filled circular hollow section or a square hollow section is only partially loaded, for example by gusset plates through the profile or by stiffeners as shown in Figure 6.22, the local design strength of concrete, $\sigma_{c,Rd}$ under the gusset plate or stiffener resulting from the sectional forces of the concrete section should be determined by:

$$\sigma_{c,Rd} = f_{cd}\left(1+\eta_{cL}\frac{t}{a}\frac{f_y}{f_{ck}}\right)\sqrt{\frac{A_c}{A_1}} \leq \frac{A_c f_{cd}}{A_1} \ , \leq f_{yd} \qquad (6.48)$$

where:

t is the wall thickness of the steel tube;

a is the diameter of the tube or the width of the square section;

A_c is the cross sectional area of the concrete section of the column;

A_1 is the loaded area under the gusset plate, see Figure 6.22;

η_{cL} = 4,9 for circular steel tubes and 3,5 for square sections.

The ratio A_c/A_1 should not exceed the value 20. Welds between the gusset plate and the steel hollow sections should be designed according to EN1993-1-8, Section 4.

(7) For concrete filled circular hollow sections, longitudinal reinforcement may be taken into account for the resistance of the column, even where the reinforcement is not welded to the end plates or in direct contact with the endplates, provided that:

- verification for fatigue is not required,
- the gap e_g between the reinforcement and the end plate does not exceed 30 mm, see Figure 6.22(a).

(8) Transverse reinforcement should be in accordance with EN 1992-1-1, 9.5.3. In case of partially encased steel sections, concrete should be held in place by transverse reinforcement arranged in accordance with Figure 6.10.

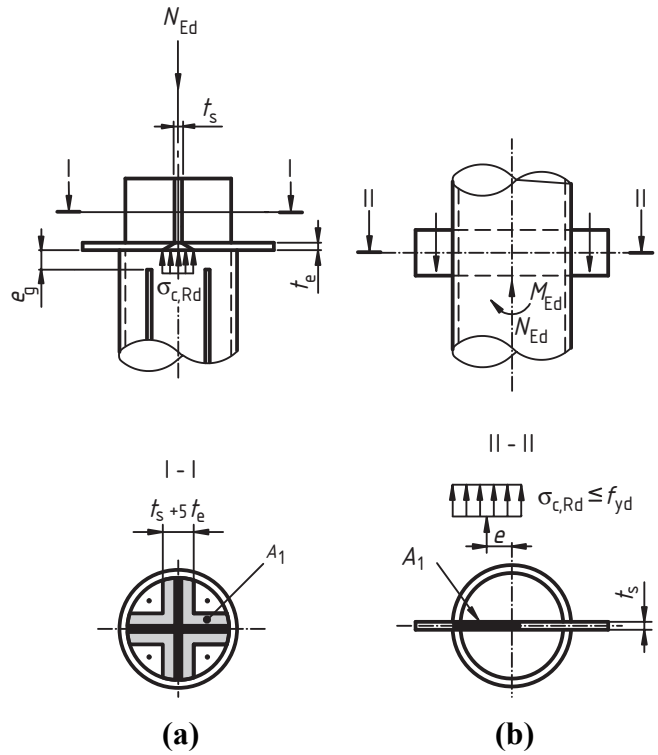

Figure 6.22 : Partially loaded circular concrete filled hollow section

(9) In the case of load introduction through only the steel section or the concrete section, for fully encased steel sections the transverse reinforcement should be designed for the longitudinal shear that results from the transmission of normal force (N_{c1} in Figure 6.23) from the parts of concrete directly connected by shear connectors into the parts of the concrete without direct shear connection (see Figure 6.23, section A-A; the hatched area outside the flanges of Figure 6.23 should be considered as not directly connected). The design and arrangement of transverse reinforcement should be based on a truss model assuming an angle of 45° between concrete compression struts and the member axis.

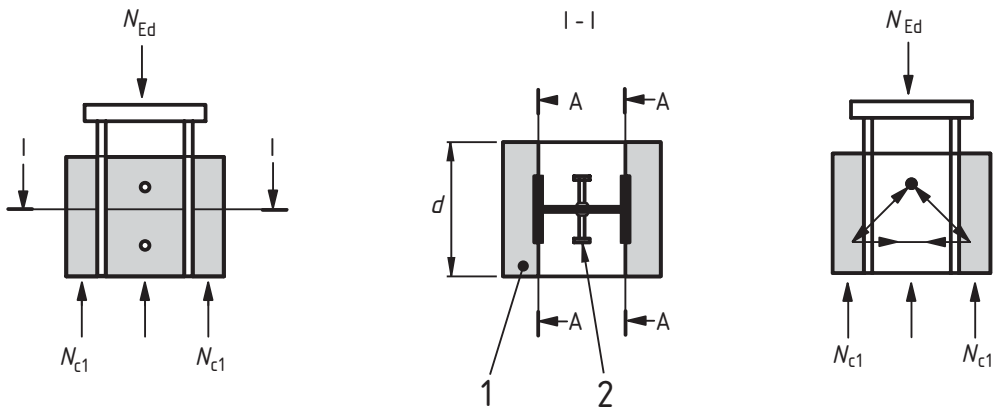

Key

1 not directly connected

2 directly connected

Figure 6.23 : Directly and not directly connected concrete areas for the design of transverse reinforcement

6.7.4.3 Longitudinal shear outside the areas of load introduction

(1) Outside the area of load introduction, longitudinal shear at the interface between concrete and steel should be verified where it is caused by transverse loads and /or end moments. Shear connectors should be provided, based on the distribution of the design value of longitudinal shear, where this exceeds the design shear strength τ_{Rd}.

(2) In absence of a more accurate method, elastic analysis, considering long term effects and cracking of concrete, may be used to determine the longitudinal shear at the interface.

(3) Provided that the surface of the steel section in contact with the concrete is unpainted and free from oil, grease and loose scale or rust, the values given in Table 6.6 may be assumed for τ_{Rd}.

Table 6.6 : Design shear strength τ_{Rd}

Type of cross section	τ_{Rd} (N/mm^2)
Completely concrete encased steel sections	0,30
Concrete filled circular hollow sections	0,55
Concrete filled rectangular hollow sections	0,40
Flanges of partially encased sections	0,20
Webs of partially encased sections	0,00

(4) The value of τ_{Rd} given in Table 6.6 for completely concrete encased steel sections applies to sections with a minimum concrete cover of 40mm and transverse and longitudinal reinforcement in accordance with 6.7.5.2. For greater concrete cover and adequate reinforcement, higher values of τ_{Rd} may be used. Unless verified by tests, for completely encased sections the increased value $\beta_c \tau_{Rd}$ may be used, with β_c given by:

$$\beta_c = 1 + 0{,}02\, c_z \left(1 - \frac{c_{z,\min}}{c_z}\right) \leq 2{,}5 \qquad (6.49)$$

where:

c_z is the nominal value of concrete cover in mm, see Figure 6.17a;

$c_{z,\min}$ = 40 mm is the minimum concrete cover.

(5) Unless otherwise verified, for partially encased I-sections with transverse shear due to bending about the weak axis due to lateral loading or end moments, shear connectors should always be provided. If the resistance to transverse shear is not be taken as only the resistance of the structural steel, then the required transverse reinforcement for the shear force $V_{c,Ed}$ according to 6.7.3.2(4) should be welded to the web of the steel section or should pass through the web of the steel section.

6.7.5 Detailing Provisions

6.7.5.1 Concrete cover of steel profiles and reinforcement

(1)P For fully encased steel sections at least a minimum cover of reinforced concrete shall be provided to ensure the safe transmission of bond forces, the protection of the steel against corrosion and spalling of concrete.

(2) The concrete cover to a flange of a fully encased steel section should be not less than 40mm, nor less than one-sixth of the breadth *b* of the flange.

(3) The cover to reinforcement should be in accordance with EN 1992-1-1, Section 4.

6.7.5.2 Longitudinal and transverse reinforcement

(1) The longitudinal reinforcement in concrete-encased columns which is allowed for in the resistance of the cross-section should be not less than 0,3% of the cross-section of the concrete. In concrete filled hollow sections normally no longitudinal reinforcement is necessary, if design for fire resistance is not required.

(2) The transverse and longitudinal reinforcement in fully or partially concrete encased columns should be designed and detailed in accordance with EN 1992-1-1, 9.5.

(3) The clear distance between longitudinal reinforcing bars and the structural steel section may be smaller than required by (2), even zero. In this case, for bond the effective perimeter *c* of the reinforcing bar should be taken as half or one quarter of its perimeter, as shown in Figure 6.24 at (a) and (b) respectively.

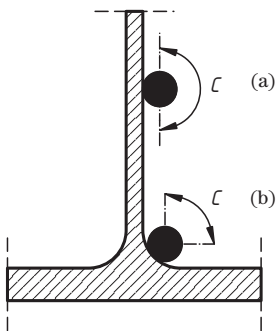

Figure 6.24 : Effective perimeter *c* of a reinforcing bar

(4) For fully or partially encased members, where environmental conditions are class X0 according to EN 1992-1-1, Table 4.1, and longitudinal reinforcement is neglected in design, a minimum longitudinal reinforcement of diameter 8 mm and 250 mm spacing and a transverse reinforcement of diameter 6 mm and 200 mm spacing should be provided. Alternatively welded mesh reinforcement of diameter 4 mm may be used.

6.8 Fatigue

6.8.1 General

(1)P The resistance of composite structures to fatigue shall be verified where the structures are subjected to repeated fluctuations of stresses.

(2)P Design for the limit state of fatigue shall ensure, with an acceptable level of probability, that during its entire design life, the structure is unlikely to fail by fatigue or to require repair of damage caused by fatigue.

(3) For headed stud shear connectors in buildings, under the characteristic combination of actions the maximum longitudinal shear force per connector should not exceed $0{,}75P_{Rd}$, where P_{Rd} is determined according to 6.6.3.1.

(4) In buildings no fatigue assessment for structural steel, reinforcement, concrete and shear connection is required where, for structural steel, EN 1993-1-1, 4(4) applies and, for concrete, EN 1992-1-1, 6.8.1, does not apply.

6.8.2 Partial factors for fatigue assessment for buildings

(1) Partial factors γ_{Mf} for fatigue strength are given in EN 1993-1-9, 3 for steel elements and in EN 1992-1-1, 2.4.2.4 for concrete and reinforcement. For headed studs in shear, a partial factor $\gamma_{Mf,s}$ should be applied.

Note: The value for $\gamma_{Mf,s}$ may be given in the National Annex. The recommended value for $\gamma_{Mf,s}$ is 1,0.

(2) Partial factors for fatigue loading γ_{Ff} should be applied.

Note: Partial factors γ_{Ff} for different kinds of fatigue loading may be given in the National Annex.

6.8.3 Fatigue strength

(1) The fatigue strength for structural steel and for welds should be taken from EN 1993-1-9, 7.

(2) The fatigue strength of reinforcing steel and pre-stressing steel should be taken from EN 1992-1-1. For concrete EN 1992-1-1, 6.8.5 applies.

(3) The fatigue strength curve of an automatically welded headed stud in accordance with 6.6.3.1 is shown in Fig. 6.25 and given for normal weight concrete by:

$$(\Delta\tau_R)^m N_R = (\Delta\tau_c)^m N_c \qquad (6.50)$$

where:

- $\Delta\tau_R$ is the fatigue shear strength related to the cross-sectional area of the shank of the stud, using the nominal diameter d of the shank;
- $\Delta\tau_c$ is the reference value at 2 million cycles with $\Delta\tau_c$ equal to 90 N/mm^2;
- m is the slope of the fatigue strength curve with the value $m = 8$;
- N_R is the number of stress-range cycles.

(4) For studs in lightweight concrete with a density class according to EN 1992-1-1, 11, the fatigue strength should be determined in accordance with (3) but with $\Delta\tau_R$ replaced by $\eta_E\Delta\tau_R$ and $\Delta\tau_c$ replaced by $\eta_E\Delta\tau_c$, where η_E is given in EN 1992-1-1, 11.3.2.

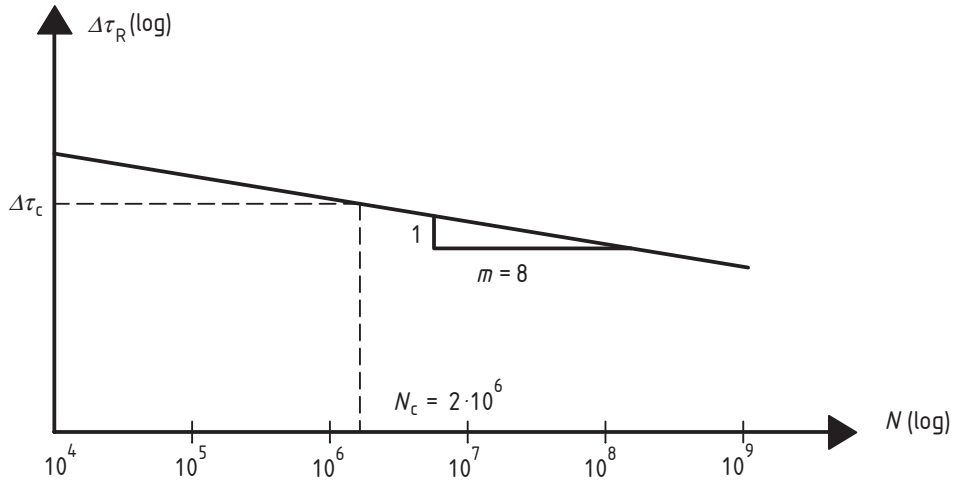

Figure 6.25 : Fatigue strength curve for headed studs in solid slabs

6.8.4 Internal forces and fatigue loadings

(1) Internal forces and moments should be determined by elastic global analysis of the structure in accordance with 5.4.1 and 5.4.2 and for the combination of actions given in EN 1992-1-1, 6.8.3.

(2) The maximum and minimum internal bending moments and/or internal forces resulting from the load combination according to (1) are defined as $M_{Ed,max,f}$ and $M_{Ed,min,f}$.

(3) For buildings fatigue loading should be obtained from the relevant Parts of EN 1991. Where no fatigue loading is specified, EN 1993-1-9, Annex A.1 may be used. Dynamic response of the structure or impact effects should be considered when appropriate.

6.8.5 Stresses

6.8.5.1 General

(1) The calculation of stresses should be based on 7.2.1.

(2)P For the determination of stresses in cracked regions the effect of tension stiffening of concrete on the stresses in reinforcement shall be taken into account.

(3) Unless verified by a more accurate method, the effect of tension stiffening on the stresses in reinforcement may be taken into account according to 6.8.5.4.

(4) Unless a more accurate method is used, for the determination of stresses in structural steel the effect of tension stiffening may be neglected.

6.8.5.2 Concrete

(1) For the determination of stresses in concrete elements EN 1992-1-1, 6.8 applies.

6.8.5.3 Structural steel

(1) Where the bending moments $M_{Ed,max,f}$ and $M_{Ed,min,f}$ cause tensile stresses in the concrete slab, the stresses in structural steel for these bending moments may be determined based on the second moment of area I_2 according to 1.5.2.12.

(2) Where $M_{Ed,min,f}$ and $M_{Ed,max,f}$, or only $M_{Ed,min,f}$, cause compression in the concrete slab, the stresses in structural steel for these bending moments should be determined with the cross-section properties of the un-cracked section.

6.8.5.4 Reinforcement

(1) Where the bending moment $M_{Ed,max,f}$ causes tensile stresses in the concrete slab and where no more accurate method is used, the effects of tension stiffening of concrete on the stress $\sigma_{s,max,f}$ in reinforcement due to $M_{Ed,max,f}$ should be determined from the equations (7.4) to (7.6) in 7.4.3 (3). In equation (7.5) in 7.4.3(3), a factor 0,2 should be used, in place of the factor 0,4.

(2) Where also the bending moment $M_{Ed,min,f}$ causes tensile stresses in the concrete slab, the stress range $\Delta\sigma$ is given by Figure 6.26 and the stress $\sigma_{s,min,f}$ in the reinforcement due to $M_{Ed,min,f}$ can be determined from:

$$\sigma_{s,min,f} = \sigma_{s,max,f} \frac{M_{Ed,min,f}}{M_{Ed,max,f}} \tag{6.51}$$

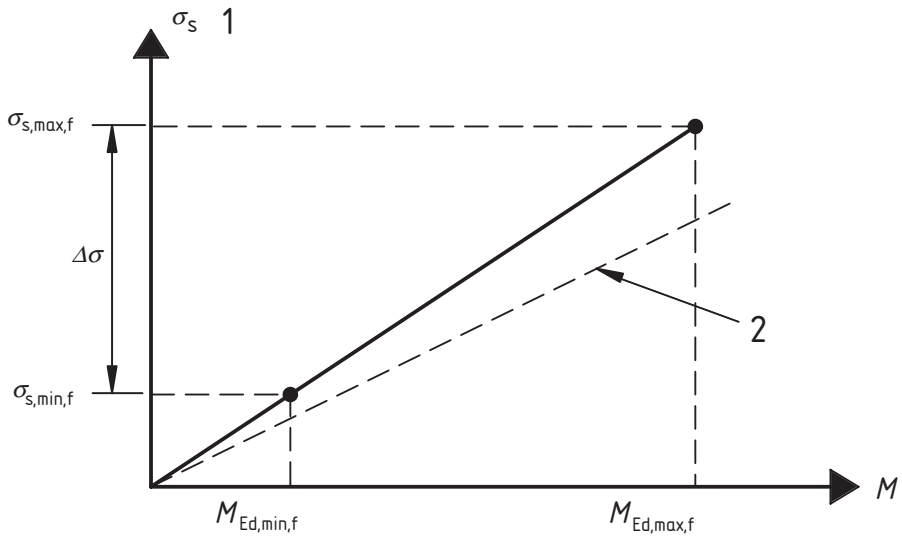

Key

1 slab in tension

2 fully cracked section

Figure 6.26 : Determination of the stresses $\sigma_{s,max,f}$ and $\sigma_{s,min,f}$ in cracked regions

(3) Where $M_{Ed,min,f}$ and $M_{Ed,max,f}$ or only $M_{Ed,min,f}$ cause compression in the concrete slab, the stresses in reinforcement for these bending moments should be determined with the cross-section properties of the un-cracked section.

6.8.5.5 Shear Connection

(1)P The longitudinal shear per unit length shall be calculated by elastic analysis.

(2) In members where cracking of concrete occurs the effects of tension stiffening should be taken into account by an appropriate model. For simplification, the longitudinal shear forces at the

interface between structural steel and concrete may be determined by using the properties of the un-cracked section.

6.8.6 Stress ranges

6.8.6.1 Structural steel and reinforcement

(1) The stress ranges should be determined from the stresses determined in accordance with 6.8.5

(2) Where the verification for fatigue is based on damage equivalent stress ranges, in general a range $\Delta\sigma_E$ should be determined from:

$$\Delta\sigma_E = \lambda\,\phi\left|\sigma_{max,f} - \sigma_{min,f}\right| \qquad (6.52)$$

where:

$\sigma_{max,f}$ and $\sigma_{min,f}$ are the maximum and minimum stresses due to 6.8.4 and 6.8.5;

λ is a damage equivalent factor;

ϕ is a damage equivalent impact factor.

(3) Where a member is subjected to combined global and local effects the separate effects should be considered. Unless a more precise method is used the equivalent constant amplitude stress due to global effects and local effects should be combined using:

$$\Delta\sigma_E = \lambda_{glob}\,\phi_{glob}\,\Delta\sigma_{E,glob} + \lambda_{loc}\,\phi_{loc}\,\Delta\sigma_{E,loc} \qquad (6.53)$$

in which subscripts “glob” and “loc” refer to global and local effects, respectively.

(4) For buildings, $\Delta\sigma_E$ for structural steel may taken as the stress range $\Delta\sigma_{E,2}$ defined in EN 1993-1-9, 1.3 and for reinforcement as the stress range $\Delta\sigma_{s,equ}$ given by EN 1992-1-1, 6.8.5.

(5) For buildings the damage equivalent factor λ is defined in EN 1993-1-9, 6.2 and in the relevant parts of EN 1993 for steel elements and for reinforcing steel in the relevant Parts of EN 1992.

(6) Where for buildings no value for λ is specified, the damage equivalent factor should be determined according to EN 1993-1-9, Annex A, using the slope of the relevant fatigue strength curve.

6.8.6.2 Shear connection

(1) For verification of stud shear connectors based on nominal stress ranges the equivalent constant range of shear stress $\Delta\tau_{E,2}$ for 2 million cycles is given by:

$$\Delta\tau_{E,2} = \lambda_v\,\Delta\tau \qquad (6.54)$$

where:

λ_v is the damage equivalent factor depending on the spectra and the slope m of the fatigue strength curve;

$\Delta\tau$ is the range of shear stress due to fatigue loading, related to the cross-sectional area of the shank of the stud using the nominal diameter d of the shank.

(2) The equivalent constant amplitude shear stress range in welds of other types of shear connection should be calculated in accordance with EN 1993-1-9, 6.

(3) Where for stud connectors in buildings no value for λ_v is specified, the damage equivalent factor should be determined in accordance with EN 1993-1-9, Annex A, using the relevant slope of the fatigue strength curve of the stud connector, given in 6.8.3.

6.8.7 Fatigue assessment based on nominal stress ranges

6.8.7.1 Structural steel, reinforcement and concrete

(1) The fatigue assessment for reinforcement should follow EN 1992-1-1, 6.8.5 or 6.8.6.

(2) The verification for concrete in compression should follow EN 1992-1-1, 6.8.7.

(3) For buildings the fatigue assessment for structural steel should follow EN 1993-1-9, 8.

6.8.7.2 Shear connection

(1) For stud connectors welded to a steel flange that is always in compression under the relevant combination of actions (see 6.8.4 (1)), the fatigue assessment should be made by checking the criterion:

$$\gamma_{Ff}\,\Delta\tau_{E,2} \leq \Delta\tau_c / \gamma_{Mf,s} \tag{6.55}$$

where:

$\Delta\tau_{E,2}$ is defined in 6.8.6.2(1);

$\Delta\tau_c$ is the reference value of fatigue strength at 2 million cycles determined in accordance with 6.8.3.

(2) Where the maximum stress in the steel flange to which stud connectors are welded is tensile under the relevant combination, the interaction at any cross-section between shear stress range $\Delta\tau_E$ in the weld of stud connectors and the normal stress range $\Delta\sigma_E$ in the steel flange should be verified using the following interaction expressions.

$$\frac{\gamma_{Ff}\,\Delta\sigma_{E,2}}{\Delta\sigma_c / \gamma_{Mf}} + \frac{\gamma_{Ff}\,\Delta\tau_{E,2}}{\Delta\tau_c / \gamma_{Mf,s}} \leq 1{,}3 \tag{6.56}$$

$$\frac{\gamma_{Ff}\,\Delta\sigma_{E,2}}{\Delta\sigma_c / \gamma_{Mf}} \leq 1{,}0 \qquad \frac{\gamma_{Ff}\,\Delta\tau_{E,2}}{\Delta\tau_c / \gamma_{Mf,s}} \leq 1{,}0 \tag{6.57}$$

where:

$\Delta\sigma_{E,2}$ is the stress range in the flange determined in accordance with 6.8.6.1;

$\Delta\sigma_c$ is the reference value of fatigue strength given in EN1993-1-9, 7, by applying category 80,

and the stress ranges $\Delta\tau_{E,2}$ and $\Delta\tau_c$ are defined in (1).

Expression (6.56) should be checked for the maximum value of $\Delta\sigma_{E,2}$ and the corresponding value $\Delta\tau_{E,2}$, as well as for the combination of the maximum value of $\Delta\tau_{E,2}$ and the corresponding value of $\Delta\sigma_{E,2}$. Unless taking into account the effect of tension stiffening of concrete by more accurate

methods, the interaction criterion should be verified with the corresponding stress ranges determined with both cracked and un-cracked cross-sectional properties.

Section 7 Serviceability limit states

7.1 General

(1)P A structure with composite members shall be designed and constructed such that all relevant serviceability limit states are satisfied according to the Principles of 3.4 of EN 1990.

(2) The verification of serviceability limit states should be based on the criteria given in EN 1990, 3.4(3).

(3) Serviceability limit states for composite slabs with profiled steel sheeting should be verified in accordance with Section 9.

7.2 Stresses

7.2.1 General

(1)P Calculation of stresses for beams at the serviceability limit state shall take into account the following effects, where relevant:

- shear lag;
- creep and shrinkage of concrete;
- cracking of concrete and tension stiffening of concrete;
- sequence of construction;
- increased flexibility resulting from significant incomplete interaction due to slip of shear connection;
- inelastic behaviour of steel and reinforcement, if any;
- torsional and distorsional warping, if any.

(2) Shear lag may be taken into account according to 5.4.1.2.

(3) Unless a more accurate method is used, effects of creep and shrinkage may be taken into account by use of modular ratios according to 5.4.2.2.

(4) In cracked sections the primary effects of shrinkage may be neglected when verifying stresses.

(5)P In section analysis the tensile strength of concrete shall be neglected.

(6) The influence of tension stiffening of concrete between cracks on stresses in reinforcement and pre-stressing steel should be taken into account. Unless more accurate methods are used, the stresses in reinforcement should be determined according to 7.4.3.

(7) The influences of tension stiffening on stresses in structural steel may be neglected.

(8) The effects of incomplete interaction may be ignored, where full shear connection is provided and where, in case of partial shear connection in buildings, 7.3.1(4) applies.

7.2.2 Stress limitation for buildings

(1) Stress limitation is not required for beams if, in the ultimate limit state, no verification of fatigue is required and no pre-stressing by tendons and/or by controlled imposed deformations (e.g. jacking of supports) is provided.

(2) For composite columns in buildings normally no stress limitation is required.

(3) If required, the stress limitations for concrete and reinforcement given in EN 1992-1-1, 7.2 apply.

7.3 Deformations in buildings

7.3.1 Deflections

(1) Deflections due to loading applied to the steel member alone should be calculated in accordance with EN 1993-1-1.

(2) Deflections due to loading applied to the composite member should be calculated using elastic analysis in accordance with Section 5.

(3) The reference level for the sagging vertical deflection δ_{max} of un-propped beams is the upper-side of the composite beam. Only where the deflection can impair the appearance of the building should the underside of the beam be taken as reference level.

(4) The effects of incomplete interaction may be ignored provided that:

a) the design of the shear connection is in accordance with 6.6,

b) either not less shear connectors are used than half the number for full shear connection, or the forces resulting from an elastic behaviour and which act on the shear connectors in the serviceability limit state do not exceed P_{Rd} and

c) in case of a ribbed slab with ribs transverse to the beam, the height of the ribs does not exceed 80 mm.

(5) The effect of cracking of concrete in hogging moment regions on the deflection should be taken into account by adopting the methods of analysis given in 5.4.2.3.

(6) For beams with critical sections in Classes 1, 2 or 3 the following simplified method may be used. At every internal support where σ_{ct} exceeds 1,5 f_{ctm} or 1,5 f_{lctm} as appropriate, the bending moment determined by un-cracked analysis defined in 5.4.2.3(2) is multiplied by the reduction factor f_1 given in Figure 7.1, and corresponding increases are made to the bending moments in adjacent spans. Curve A may be used for internal spans only, when the loadings per unit length on all spans are equal and the lengths of all spans do not differ by more than 25%. Otherwise the approximate lower bound value f_1 = 0.6 (line B) should be used.

(7) For the calculation of deflection of un-propped beams, account may be taken of the influence of local yielding of structural steel over a support by multiplying the bending moment at the support, determined according to the methods given in this clause, with an additional reduction factor as follows:

– f_2 = 0,5 if f_y is reached before the concrete slab has hardened;
– f_2 = 0,7 if f_y is reached after concrete has hardened.

This applies for the determination of the maximum deflection but not for pre-camber.

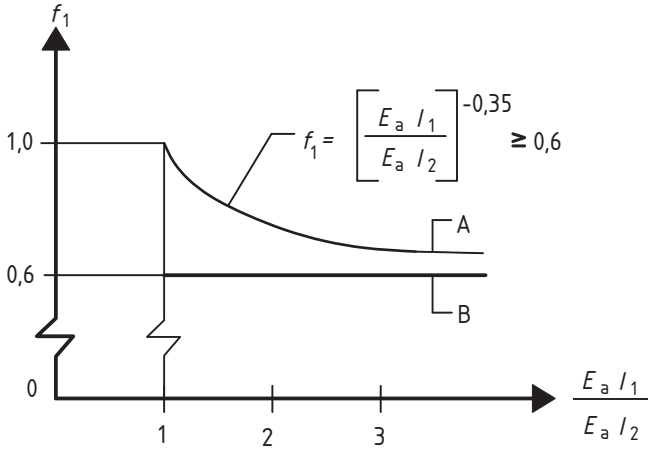

Figure 7.1 : Reduction factor for the bending moment at supports

(8) Unless specifically required by the client, the effect of curvature due to shrinkage of normal weight concrete need not be included when the ratio of span to overall depth of the beam is not greater than 20.

7.3.2 Vibration

(1) The dynamic properties of floor beams should satisfy the criteria in EN1990, A1.4.4.

7.4 Cracking of concrete

7.4.1 General

(1) For the limitation of crack width, the general considerations of EN 1992-1-1, 7.3.1(1) - (9) apply to composite structures. The limitation of crack width depends on the exposure classes according to EN 1992-1-l, 4.

(2) An estimation of crack width can be obtained from EN 1992-1-1, 7.3.4, where the stress σ_s should be calculated by taking into account the effects of tension stiffening. Unless a more precise method is used, σ_s may be determined according to 7.4.3(3).

(3) As a simplified and conservative alternative, crack width limitation to acceptable width can be achieved by ensuring a minimum reinforcement defined in 7.4.2, and bar spacing or diameters not exceeding the limits defined in 7.4.3.

(4) In cases where beams in buildings are designed as simply supported although the slab is continuous and the control of crack width is of no interest, the longitudinal reinforcement provided within the effective width of the concrete slab according to 6.1.2 should be not less than:

- 0,4 % of the area of the concrete, for propped construction ;
- 0,2 % of the area of concrete, for un-propped construction.

The reinforcement in the beam designed as simply-supported should extend over a length of 0,25*L* each side of an internal support, or 0,5L adjacent to a cantilever, where *L* is the length of the relevant span or the length of the cantilever respectively. No account should be taken of any profiled steel sheeting. The maximum spacing of the bars should be in accordance with 9.2.1(5) for a composite slab, or with EN 1992-1-1, 9.3.1.1(3) for a solid concrete flange.

7.4.2 Minimum reinforcement

(1) Unless a more accurate method is used in accordance with EN 1992-1-1, 7.3.2(1), in all sections without pre-stressing by tendons and subjected to significant tension due to restraint of imposed deformations (e.g. primary and secondary effects of shrinkage), in combination or not with effects of direct loading the required minimum reinforcement area A_s for the slabs of composite beams is given by:

$$A_s = k_s k_c k f_{ct,eff} A_{ct} / \sigma_s \tag{7.1}$$

where :

$f_{ct,eff}$ is the mean value of the tensile strength of the concrete effective at the time when cracks may first be expected to occur. Values of $f_{ct,eff}$ may be taken as those for f_{ctm}, see EN 1992-1-1, Table 3.1, or as f_{lctm}, see Table 11.3.1, as appropriate, taking as the class the strength at the time cracking is expected to occur. When the age of the concrete at cracking cannot be established with confidence as being less than 28 days, a minimum tensile strength of 3 N/mm^2 may be adopted;

k is a coefficient which allows for the effect of non-uniform self-equilibrating stresses which may be taken as 0,8;

k_s is a coefficient which allows for the effect of the reduction of the normal force of the concrete slab due to initial cracking and local slip of the shear connection, which may be taken as 0,9;

k_c is a coefficient which takes account of the stress distribution within the section immediately prior to cracking and is given by:

$$k_c = \frac{1}{1 + h_c / (2 z_o)} + 0{,}3 \leq 1{,}0 \tag{7.2}$$

h_c is the thickness of the concrete flange, excluding any haunch or ribs;

z_o is the vertical distance between the centroids of the un-cracked concrete flange and the un-cracked composite section, calculated using the modular ratio n_0 for short-term loading;

σ_s is the maximum stress permitted in the reinforcement immediately after cracking. This may be taken as its characteristic yield strength f_{sk}. A lower value, depending on the bar size, may however be needed to satisfy the required crack width limits. This value is given in Table 7.1;

A_{ct} is the area of the tensile zone (caused by direct loading and primary effects of shrinkage) immediately prior to cracking of the cross section. For simplicity the area of the concrete section within the effective width may be used.

(2) The maximum bar diameter for the minimum reinforcement may be modified to a value ϕ given by:

$$\phi = \phi^* f_{ct,eff} / f_{ct,0} \tag{7.3}$$

where:

ϕ^* is the maximum bar size given in Table 7.1;

$f_{ct,0}$ is a reference strength of 2,9 N/mm^2.

Table 7.1 : Maximum bar diameters for high bond bars

Steel stress σ_s (N/mm^2)	Maximum bar diameter ϕ^* (mm) for design crack width w_k		
	w_k=0,4mm	w_k=0,3mm	w_k=0,2mm
160	40	32	25
200	32	25	16
240	20	16	12
280	16	12	8
320	12	10	6
360	10	8	5
400	8	6	4
450	6	5	-

(3) At least half of the required minimum reinforcement should be placed between mid-depth of the slab and the face subjected to the greater tensile strain.

(4) For the determination of the minimum reinforcement in concrete flanges with variable depth transverse to the direction of the beam the local depth should be used.

(5) For buildings the minimum reinforcement according to (1) and (2) should be placed where, under the characteristic combination of actions, stresses are tensile.

(6) In buildings minimum lower longitudinal reinforcement for the concrete encasement of the web of a steel I-section should be determined from expression (7.1) with k_c taken as 0,6 and k taken as 0,8.

7.4.3 Control of cracking due to direct loading

(1) Where at least the minimum reinforcement given by 7.4.2 is provided, the limitation of crack widths to acceptable values may generally be achieved by limiting bar spacing or bar diameters. Maximum bar diameter and maximum bar spacing depend on the stress σ_s in the reinforcement and the design crack width. Maximum bar diameters are given in Table 7.1 and maximum bar spacing in Table 7.2.

Table 7.2 Maximum bar spacing for high bond bars

Steel stress σ_s (N/mm^2)	Maximum bar spacing (mm) for design crack width w_k		
	w_k=0,4mm	w_k=0,3mm	w_k=0,2mm
160	300	300	200
200	300	250	150
240	250	200	100
280	200	150	50
320	150	100	-
360	100	50	-

(2) The internal forces should be determined by elastic analysis in accordance with Section 5 taking into account the effects of cracking of concrete. The stresses in the reinforcement should be determined taking into account effects of tension stiffening of concrete between cracks. Unless a more precise method is used, the stresses may be calculated according to (3).

(3) In composite beams where the concrete slab is assumed to be cracked and not pre-stressed by tendons, stresses in reinforcement increase due to the effects of tension stiffening of concrete between cracks compared with the stresses based on a composite section neglecting concrete. The tensile stress in reinforcement σ_s due to direct loading may be calculated from:

$$\sigma_s = \sigma_{s,o} + \Delta\sigma_s \tag{7.4}$$

with:

$$\Delta\sigma_s = \frac{0{,}4\ f_{ctm}}{\alpha_{st}\ \rho_s} \tag{7.5}$$

$$\alpha_{st} = \frac{A\,I}{A_a\,I_a} \tag{7.6}$$

where:

$\sigma_{s,o}$ is the stress in the reinforcement caused by the internal forces acting on the composite section, calculated neglecting concrete in tension;

f_{ctm} is the mean tensile strength of the concrete, for normal concrete taken as f_{ctm} from EN 1992-1-1, Table 3.1 or for lightweight concrete as f_{lctm} from Table 11.3.1;

ρ_s is the reinforcement ratio, given by $\rho_s = (A_s / A_{ct})$;

A_{ct} is the effective area of the concrete flange within the tensile zone; for simplicity the area of the concrete section within the effective width should be used;

A_s is the total area of all layers of longitudinal reinforcement within the effective area A_{ct} ;

A, I are area and second moment of area, respectively, of the effective composite section neglecting concrete in tension and profiled sheeting, if any;

A_a, I_a are the corresponding properties of the structural steel section.

(4) For buildings without pre-stressing by tendons the quasi-permanent combination of actions normally should be used for the determination of σ_s.

Section 8 Composite joints in frames for buildings

8.1 Scope

(1) A composite joint is defined in 1.5.2.8. Some examples are shown in Figure 8.1. Other joints in composite frames should be designed in accordance with EN 1992-1-1 or EN 1993-1-8, as appropriate.

(2) Section 8 concerns joints subject to predominantly static loading. It supplements or modifies EN 1993-1-8.

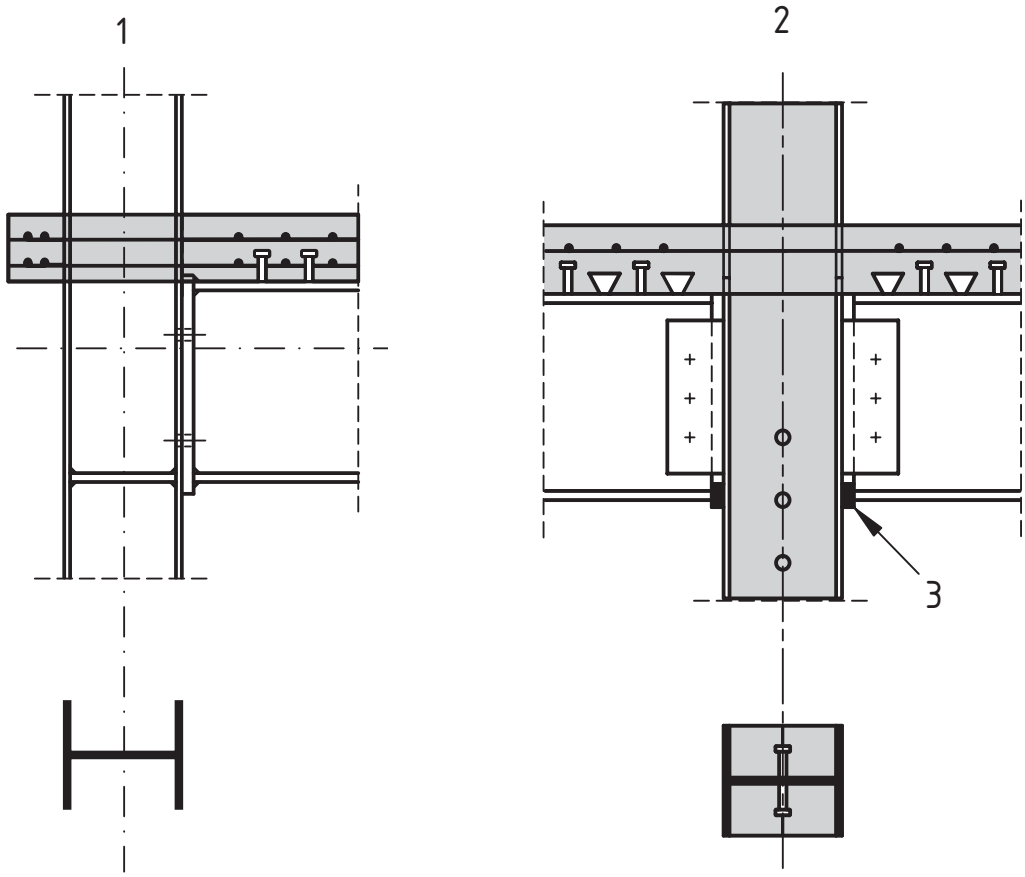

Key

1 single-sided configuration

2 double-sided configuration

3 contact plate

Figure 8.1 : Examples of composite joints

8.2 Analysis, modelling and classification

8.2.1 General

(1) The provisions in EN 1993-1-8, 5 for joints connecting H or I sections are applicable with the modifications given in 8.2.2 and 8.2.3 below.

8.2.2 Elastic global analysis

(1) Where the rotational stiffness S_j is taken as $S_{j,ini/\eta}$ in accordance with EN 1993-1-8, 5.1.2, the value of the stiffness modification coefficient η for a contact-plate connection should be taken as 1,5.

8.2.3 Classification of joints

(1) Joints should be classified in accordance with EN 1993-1-8, 5.2, taking account of composite action.

(2) For the classification, the directions of the internal forces and moment should be considered.

(3) Cracking and creep in connected members may be neglected.

8.3 Design methods

8.3.1 Basis and scope

(1) EN 1993-1-8, 6 may be used as a basis for the design of composite beam-to-column joints and splices provided that the steelwork part of the joint is within the scope of that section.

(2) The structural properties of components assumed in design should be based on tests or on analytical or numerical methods supported by tests.

Note: Properties of components are given in 8.4 and Annex A herein and in EN 1993-1-8, 6.

(3) In determining the structural properties of a composite joint, a row of reinforcing bars in tension may be treated in a manner similar to a bolt-row in tension in a steel joint, provided that the structural properties are those of the reinforcement.

8.3.2 Resistance

(1) Composite joints should be designed to resist vertical shear in accordance with relevant provisions of EN 1993-1-8.

(2) The design resistance moment of a composite joint with full shear connection should be determined by analogy to provisions for steel joints given in EN 1993-1-8, 6.2.7, taking account of the contribution of reinforcement.

(3) The resistance of components should be determined from 8.4 below and EN 1993-1-8, 6.2.6, where relevant.

8.3.3 Rotational stiffness

(1) The rotational stiffness of a joint should be determined by analogy to provisions for steel joints given in EN 1993-1-8, 6.3.1, taking account of the contribution of reinforcement.

(2) The value of the coefficient ψ, see EN 1993-1-8, 6.3.1(6), should be taken as 1,7 for a contact-plate joint.

8.3.4 Rotation capacity

(1) The influence of cracking of concrete, tension stiffening and deformation of the shear connection should be considered in determining the rotation capacity.

(2) The rotation capacity of a composite joint may be demonstrated by experimental evidence. Account should be taken of possible variations of the properties of materials from specified characteristic values. Experimental demonstration is not required when using details which experience has proved have adequate properties.

(3) Alternatively, calculation methods may be used, provided that they are supported by tests.

8.4 Resistance of components

8.4.1 Scope

(1) The resistance of the following basic joint components should be determined in accordance with 8.4.2 below:

- longitudinal steel reinforcement in tension;
- steel contact plate in compression.

(2) The resistance of components identified in EN 1993-1-8 should be taken as given therein, except as given in 8.4.3 below.

(3) The resistance of concrete encased webs in steel column sections should be determined in accordance with 8.4.4 below.

8.4.2 Basic joint components

8.4.2.1 Longitudinal steel reinforcement in tension

(1) The effective width of the concrete flange should be determined for the cross-section at the connection according to 5.4.1.2.

(2) It should be assumed that the effective area of longitudinal reinforcement in tension is stressed to its design yield strength f_{sd}.

(3) Where unbalanced loading occurs, a strut-tie model may be used to verify the introduction of the forces in the concrete slab into the column, see Figure 8.2.

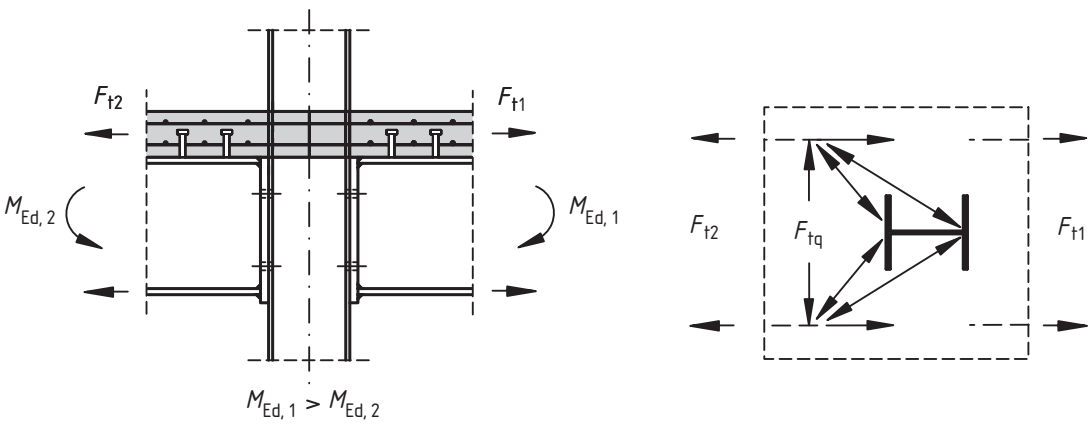

Figure 8.2 : Strut-tie model

(4) For a single-sided configuration designed as a composite joint, the effective longitudinal slab reinforcement in tension should be anchored sufficiently well beyond the span of the beam to enable the design tension resistance to be developed.

8.4.2.2 Steel contact plate in compression

(1) Where a height or breadth of the contact plate exceeds the corresponding dimension of the compression flange of the steel section, the effective dimension should be determined assuming dispersion at 45° through the contact plate.

(2) It should be assumed that the effective area of the contact plate in compression may be stressed to its design yield strength f_{yd}.

8.4.3 Column web in transverse compression

(1) For a contact plate connection, the effective width of the column web in compression $b_{eff,c,wc}$ should be determined assuming dispersion at 45° through the contact plate.

8.4.4 Reinforced components

8.4.4.1 Column web panel in shear

(1) Where the steel column web is encased in concrete, see Figure 6.17b, the design shear resistance of the panel, determined in accordance with EN 1993-1-8, 6.2.6.1 may be increased to allow for the encasement.

(2) For a single-sided joint, or a double-sided joint in which the beam depths are similar, the design shear resistance of concrete encasement to the column web panel $V_{wp,c,Rd}$ should be determined using:

$$V_{wp,c,Rd} = 0{,}85\,\nu A_c f_{cd} \sin\theta \tag{8.1}$$

with:

$$A_c = 0{,}8\,(b_c - t_w)\,(h - 2t_f)\cos\theta \tag{8.2}$$

$$\theta = \arctan\,[(h - 2t_f) / z] \tag{8.3}$$

where:

b_c is the breadth of the concrete encasement;

h is the depth of the column section;

t_f is the column flange thickness;

t_w is the column web thickness;

z is the lever arm, see EN 1993-1-8, 6.2.7.1 and Figure 6.15.

(3) The reduction factor ν to allow for the effect of longitudinal compression in the column on the design resistance of the column web panel in shear should be determined using:

$$\nu = 0{,}55\left(1 + 2\left(\frac{N_{Ed}}{N_{p1,Rd}}\right)\right) \leq 1{,}1 \tag{8.4}$$

where:

N_{Ed} is the design compressive normal force in the column;

$N_{p1,Rd}$ is the design plastic resistance of the column's cross-section including the encasement, see 6.7.3.2.

8.4.4.2 Column web in transverse compression

(1) Where the steel column web is encased in concrete the design resistance of the column web in compression, determined in accordance with EN 1993-1-8, 6.2.6.2 may be increased to allow for the encasement.

(2) The design resistance of the concrete encasement to the column web in transverse compression $F_{c,wc,c,Rd}$ should be determined using:

$$F_{c,wc,c,Rd} = 0{,}85\, k_{wc,c}\, t_{eff,c}\, (b_c - t_w)\, f_{cd} \tag{8.5}$$

where:

$t_{eff,c}$ is the effective length of concrete, determined in a similar manner to the effective width $b_{eff,c,wc}$ defined in EN 1993-1-8, 6.2.6.2.

(3) Where the concrete encasement is subject to a longitudinal compressive stress, its effect on the resistance of the concrete encasement in transverse compression may be allowed for by multiplying the value of $F_{c,wc,c,Rd}$ by a factor $k_{wc,c}$ given by:

$$k_{wc,c} = 1{,}3 + 3{,}3\frac{\sigma_{com,c,Ed}}{f_{cd}} \leq 2{,}0 \tag{8.6}$$

where:

$\sigma_{com,c,Ed}$ is the longitudinal compressive stress in the encasement due to the design normal force N_{Ed}.

In the absence of a more accurate method, $\sigma_{com,c,Ed}$ may be determined from the relative contribution of the concrete encasement to the plastic resistance of the column section in compression $N_{pl,Rd}$, see 6.7.3.2.

Section 9 Composite slabs with profiled steel sheeting for buildings

9.1 General

9.1.1 Scope

(1)P This Section deals with composite floor slabs spanning only in the direction of the ribs. Cantilever slabs are included. It applies to designs for building structures where the imposed loads are predominantly static, including industrial buildings where floors may be subject to moving loads.

(2)P The scope is limited to sheets with narrowly spaced webs.

Note: Narrowly spaced webs are defined by an upper limit on the ratio b_r / b_s, see Figure 9.2. The value for the limit may be given in the National Annex. The recommended value is 0,6.

(3)P For structures where the imposed load is largely repetitive or applied abruptly in such a manner as to produce dynamic effects, composite slabs are permitted, but special care shall be taken over the detailed design to ensure that the composite action does not deteriorate in time.

(4)P Slabs subject to seismic loading are not excluded, provided an appropriate design method for the seismic conditions is defined for the particular project or is given in another Eurocode.

(5) Composite slabs may be used to provide lateral restraint to the steel beams and to act as a diaphragm to resist horizontal actions, but no specific rules are given in this Standard. For diaphragm action of the profiled steel sheeting while it is acting as formwork the rules given in EN1993-1-3, 10 apply.

9.1.2 Definitions

9.1.2.1 Types of shear connection

The profiled steel sheet shall be capable of transmitting horizontal shear at the interface between the sheet and the concrete; pure bond between steel sheeting and concrete is not considered effective for composite action. Composite behaviour between profiled sheeting and concrete shall be ensured by one or more of the following means, see Figure 9.1:

a) mechanical interlock provided by deformations in the profile (indentations or embossments);

b) frictional interlock for profiles shaped in a re-entrant form;

c) end anchorage provided by welded studs or another type of local connection between the concrete and the steel sheet, only in combination with (a) or (b);

d) end anchorage by deformation of the ribs at the end of the sheeting, only in combination with (b).

Other means are not excluded but are not within the scope of this Standard.

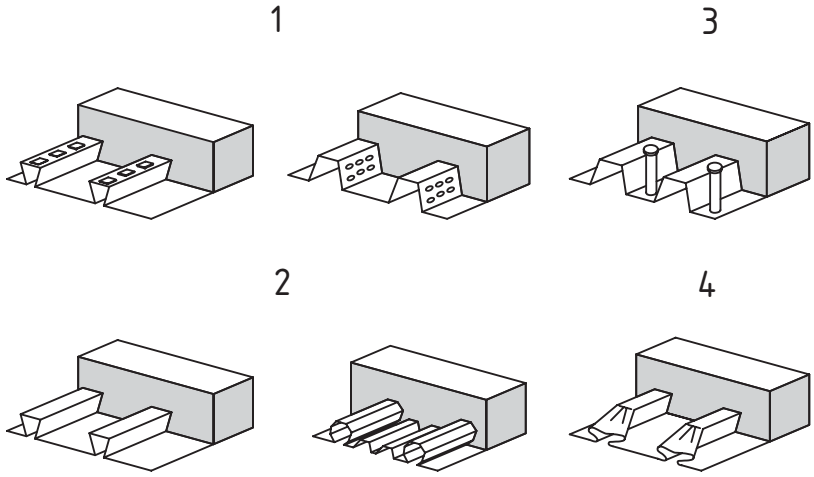

Key

1 mechanical interlock

2 frictional interlock

3 end anchorage by through-deck welded studs

4 end anchorage by deformation of the ribs

Figure 9.1 : Typical forms of interlock in composite slabs

9.1.2.2 Full shear connection and partial shear connection

A span of a slab has full shear connection when increase in the resistance of the longitudinal shear connection would not increase the design bending resistance of the member. Otherwise, the shear connection is partial.

9.2 Detailing provisions

9.2.1 Slab thickness and reinforcement

(1)P The overall depth of the composite slab h shall be not less than 80 mm. The thickness of concrete h_c above the main flat surface of the top of the ribs of the sheeting shall be not less than 40 mm.

(2)P If the slab is acting compositely with the beam or is used as a diaphragm, the total depth shall be not less than 90 mm and h_c shall be not less than 50 mm.

(3)P Transverse and longitudinal reinforcement shall be provided within the depth h_c of the concrete.

(4) The amount of reinforcement in both directions should be not less than 80 mm^2/m.

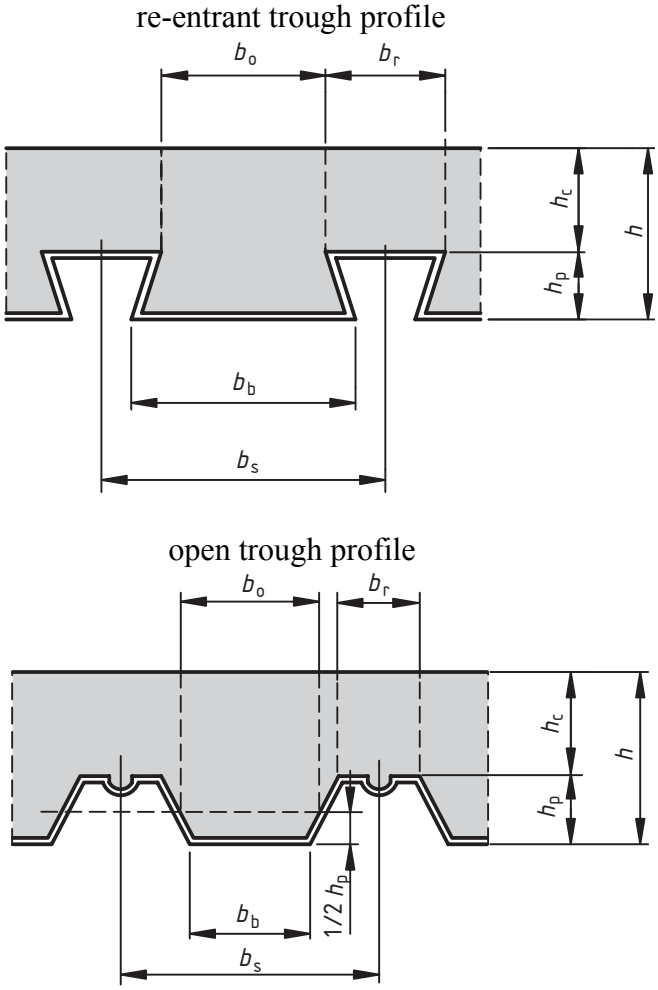

Figure 9.2 : Sheet and slab dimensions

(5) The spacing of the reinforcement bars should not exceed 2h and 350 mm, whichever is the lesser.

9.2.2 Aggregate

(1)P The nominal size of the aggregate depends on the smallest dimension in the structural element within which concrete is poured, and shall not exceed the least of:

- 0,40 h_c, see Figure 9.2;
- $b_0/3$, where b_0 is the mean width of the ribs (minimum width for re-entrant profiles), see Figure 9.2;
- 31,5 mm (sieve C 31,5).

9.2.3 Bearing requirements

(1)P The bearing length shall be such that damage to the slab and the bearing is avoided; that fastening of the sheet to the bearing can be achieved without damage to the bearing and that collapse cannot occur as a result of accidental displacement during erection.

(2) The bearing lengths l_{bc} and l_{bs} as indicated in Figure 9.3 should not be less than the following limiting values:

- for composite slabs bearing on steel or concrete: l_{bc} = 75 mm and l_{bs} = 50 mm;
- for composite slabs bearing on other materials: l_{bc} = 100 mm and l_{bs} = 70 mm.

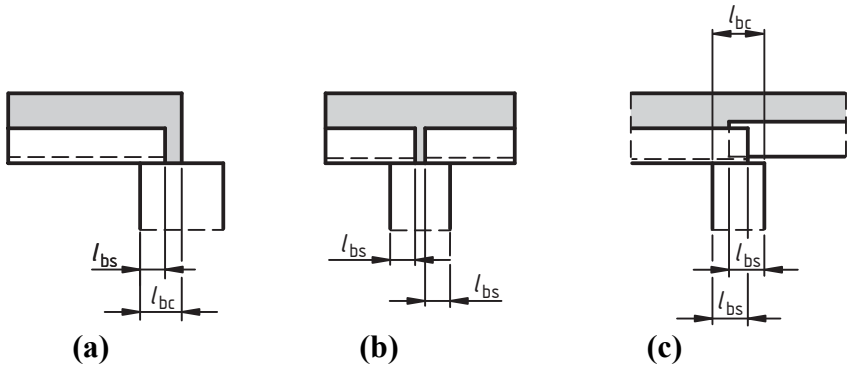

Note: Overlapping of some sheeting profiles is impractical.

Figure 9.3 : Minimum bearing lengths

9.3 Actions and action effects

9.3.1 Design situations

(1)P All relevant design situations and limit states shall be considered in design so as to ensure an adequate degree of safety and serviceability.

(2)P The following situations shall be considered:

a) Profiled steel sheeting as shuttering: Verification is required for the behaviour of the profiled steel sheeting while it is acting as formwork for the wet concrete. Account shall be taken of the effect of props, if any.

b) Composite slab: Verification is required for the floor slab after composite behaviour has commenced and any props have been removed.

9.3.2 Actions for profiled steel sheeting as shuttering

(1) The following loads should be taken into account in calculations for the steel deck as shuttering:

- weight of concrete and steel deck;
- construction loads including local heaping of concrete during construction, in accordance with EN 1991-1-6, 4.11.2;
- storage load, if any;
- "ponding" effect (increased depth of concrete due to deflection of the sheeting).

(2) If the central deflection δ of the sheeting under its own weight plus that of the wet concrete, calculated for serviceability, is less than 1/10 of the slab depth, the ponding effect may be ignored in the design of the steel sheeting. If this limit is exceeded, this effect should be allowed for. It may be assumed in design that the nominal thickness of the concrete is increased over the whole span by $0{,}7\delta$.

9.3.3 Actions for composite slab

(1) Loads and load arrangements should be in accordance with EN 1991-1-1.

(2) In design checks for the ultimate limit state, it may be assumed that the whole of the loading acts on the composite slab, provided this assumption is also made in design for longitudinal shear.

9.4 Analysis for internal forces and moments

9.4.1 Profiled steel sheeting as shuttering

(1) The design of the profiled steel sheeting as shuttering should be in accordance with EN1993-1-3.

(2) Plastic redistribution of moments should not be allowed when temporary supports are used.

9.4.2 Analysis of composite slab

(1) The following methods of analysis may be used for ultimate limit states:

a) Linear elastic analysis with or without redistribution;

b) Rigid plastic global analysis provided that it is shown that sections where plastic rotations are required have sufficient rotation capacity;

c) Elastic-plastic analysis, taking into account the non-linear material properties.

(2) Linear methods of analysis should be used for serviceability limit states.

(3) If the effects of cracking of concrete are neglected in the analysis for ultimate limit states, the bending moments at internal supports may optionally be reduced by up to 30%, and corresponding increases made to the sagging bending moments in the adjacent spans.

(4) Plastic analysis without any direct check on rotation capacity may be used for the ultimate limit state if reinforcing steel of class C in accordance with EN 1992-1-1, Annex C is used and the span is not greater than 3,0 m.

(5) A continuous slab may be designed as a series of simply supported spans. Nominal reinforcement in accordance with 9.8.1 should be provided over intermediate supports.

9.4.3 Effective width of composite slab for concentrated point and line loads

(1) Where concentrated point or line loads are to be supported by the slab, they may be considered to be distributed over an effective width, unless a more exact analysis is carried out.

(2) Concentrated point or line loads parallel to the span of the slab should be considered to be distributed over a width b_m, measured immediately above the ribs of the sheeting, see Figure 9.4, and given by:

$$b_m = b_p + 2(h_c + h_f) \tag{9.1}$$

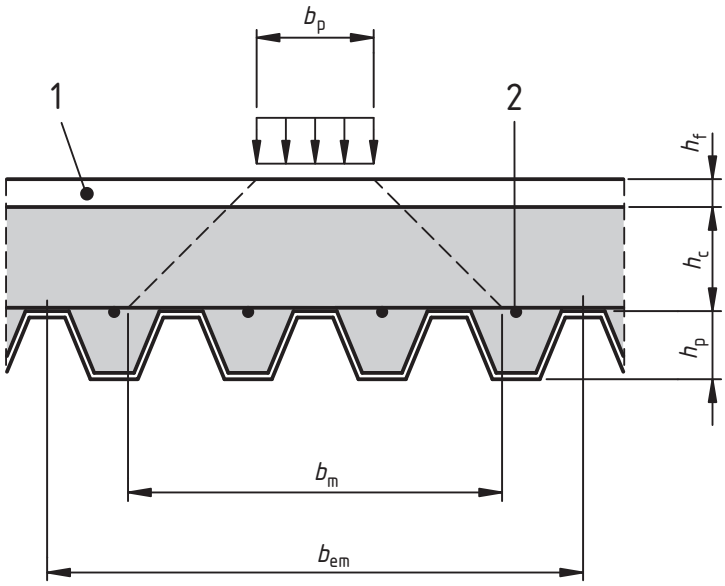

Key

1 finishes

2 reinforcement

Figure 9.4 : Distribution of concentrated load

(3) For concentrated line loads perpendicular to the span of the slab, expression (9.1) should be used for b_m, with b_p taken as the length of the concentrated line load.

(4) If h_p / h does not exceed 0,6 the width of the slab considered to be effective for global analysis and for resistance may for simplification be determined with expressions (9.2) to (9.4):

(a) for bending and longitudinal shear:

– for simple spans and exterior spans of continuous slabs

$$b_{em} = b_m + 2L_p\left(1 - \frac{L_p}{L}\right) \leq \text{slab width} \tag{9.2}$$

– for interior spans of continuous slabs

$$b_{em} = b_m + 1{,}33 L_p \left(1 - \frac{L_p}{L}\right) \leq \text{slab width} \tag{9.3}$$

(b) for vertical shear:

$$b_{ev} = b_m + L_p \left(1 - \frac{L_p}{L}\right) \leq \text{slab width} \tag{9.4}$$

where:

L_p is the distance from the centre of the load to the nearest support;

L is the span length.

(5) If the characteristic imposed loads do not exceed the following values, a nominal transverse reinforcement may be used without calculation:

- concentrated load: 7,5 kN;
- distributed load: 5,0 kN/m^2.

This nominal transverse reinforcement should have a cross-sectional area of not less than 0,2% of the area of structural concrete above the ribs, and should extend over a width of not less than b_{em} as calculated in this clause. Minimum anchorage lengths should be provided beyond this width in accordance with EN 1992-1-1. Reinforcement provided for other purposes may fulfil all or part of this rule.

(6) Where the conditions in (5) are not satisfied, the distribution of bending moments caused by line or point loads should be determined and adequate transverse reinforcement determined using EN 1992-1-1.

9.5 Verification of profiled steel sheeting as shuttering for ultimate limit states

(1) Verification of the profiled steel sheeting for ultimate limit states should be in accordance with EN 1993-1-3. Due consideration should be given to the effect of embossments or indentations on the design resistances.

9.6 Verification of profiled steel sheeting as shuttering for serviceability limit states

(1) Section properties should be determined in accordance with EN 1993-1-3.

(2) The deflection δ_s of the sheeting under its own weight plus the weight of wet concrete, excluding the construction load, should not exceed $\delta_{s,max}$.

Note: Values for $\delta_{s,max}$ may be given in the National Annex. The recommended value is $L/180$ where L is the effective span between supports (props being supports in this context).

9.7 Verification of composite slabs for the ultimate limit states

9.7.1 Design criterion

(1)P The design values of internal forces shall not exceed the design values of resistance for the relevant ultimate limit states.

9.7.2 Flexure

(1) In case of full shear connection the bending resistance M_{Rd} of any cross section should be determined by plastic theory in accordance with 6.2.1.2(1) but with the design yield strength of the steel member (sheeting) taken as that for the sheeting, $f_{yp,d}$.

(2)P In hogging bending the contribution of the steel sheeting shall only be taken into account where the sheet is continuous and when for the construction phase redistribution of moments by plastification of cross-sections over supports has not been used.

(3) For the effective area A_{pe} of the steel sheeting, the width of embossments and indentations in the sheet should be neglected, unless it is shown by tests that a larger area is effective.

(4) The effect of local buckling of compressed parts of the sheeting should be taken into account by using effective widths not exceeding twice the limiting values given in EN 1993-1-1, Table 5.2 for Class 1 steel webs.

(5) The sagging bending resistance of a cross-section with the neutral axis above the sheeting should be calculated from the stress distribution in Figure 9.5.

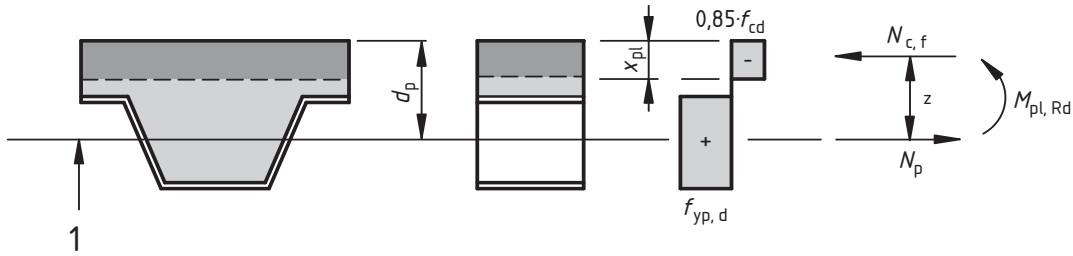

Key

1 centroidal axis of the profiled steel sheeting

Figure 9.5 : Stress distribution for sagging bending if the neutral axis is above the steel sheeting

(6) The sagging bending resistance of a cross-section with the neutral axis in the sheeting should be calculated from the stress distribution in Figure 9.6.

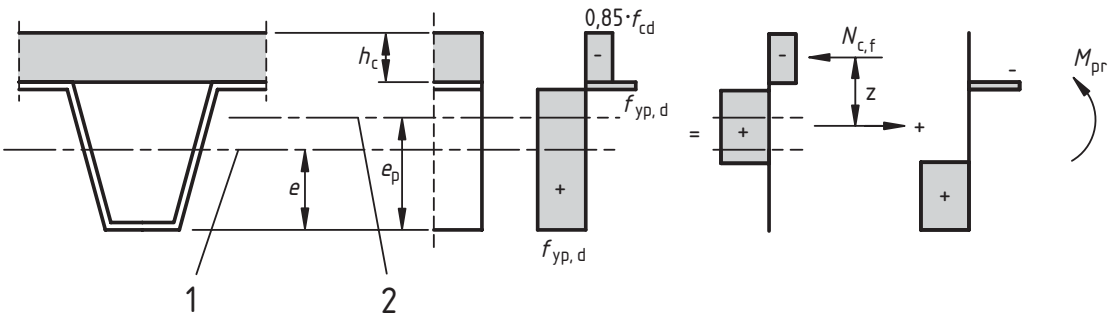

Key

1 centroidal axis of the profiled steel sheeting

2 plastic neutral axis of the profiled steel sheeting

Figure 9.6 : Stress distribution for sagging bending if neutral axis is in the steel sheeting

For simplification z and M_{pr} may be determined with the following expressions respectively:

$$z = h - 0{,}5\, h_c - e_p + (e_p - e)\, \frac{N_{cf}}{A_{pe}\, f_{yp,d}} \tag{9.5}$$

$$M_{pr} = 1{,}25\, M_{pa} \left(1 - \frac{N_{cf}}{A_{pe}\, f_{yp,d}} \right) \leq M_{pa} \tag{9.6}$$

(7) If the contribution of the steel sheeting is neglected the hogging bending resistance of a cross-section should be calculated from the stress distribution in Figure 9.7.

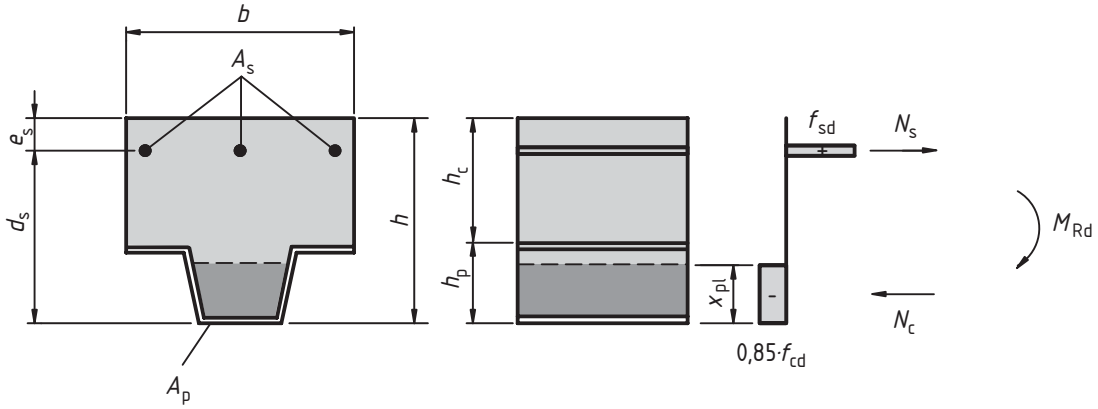

Figure 9.7 : Stress distribution for hogging bending

9.7.3 Longitudinal shear for slabs without end anchorage

(1)P The provisions in this clause 9.7.3 apply to composite slabs with mechanical or frictional interlock (types (a) and (b) as defined in 9.1.2.1).

(2) The design resistance against longitudinal shear should be determined by the *m-k* method, see (4) and (5) below, or by the partial connection method as given in (7) – (10). The partial connection method should be used only for composite slabs with a ductile longitudinal shear behaviour.

(3) The longitudinal shear behaviour may be considered as ductile if the failure load exceeds the load causing a recorded end slip of 0,1 mm by more than 10%. If the maximum load is reached at a midspan deflection exceeding $L/50$, the failure load should be taken as the load at the midspan deflection of $L/50$.

(4) If the *m-k* method is used it should be shown that the maximum design vertical shear V_{Ed} for a width of slab b does not exceed the design shear resistance $V_{l,Rd}$ determined from the following expression:

$$V_{l,Rd} = \frac{b\, d_p}{\gamma_{VS}} \left(\frac{m\, A_p}{b\, L_s} + k \right) \tag{9.7}$$

where:

b, d_p are in mm;

A_p is the nominal cross-section of the sheeting in mm^2;

m, k are design values for the empirical factors in N/mm^2 obtained from slab tests meeting the basic requirements of the m-k method;

L_s is the shear span in mm and defined in (5) below;

γ_{VS} is the partial safety factor for the ultimate limit state.

Note 1: The value for γ_{VS} may be given in the National Annex. The recommended value for γ_{VS} is 1,25.

Note 2: The test method as given in Annex B may be assumed to meet the basic requirements of the m-k method

Note 3: In expression (9.7) the nominal cross-section A_p is used because this value is normally used in the test evaluation to determine m and k.

(5) For design, L_s should be taken as:

- $L/4$ for a uniform load applied to the entire span length;
- the distance between the applied load and the nearest support for two equal and symmetrically placed loads;

  for other loading arrangements, including a combination of distributed and asymmetrical point loads, an assessment should be made based upon test results or by the following approximate calculation. The shear span should be taken as the maximum moment divided by the greater vertical shear force adjacent to the supports for the span considered.

(6) Where the composite slab is designed as continuous, it is permitted to use an equivalent isostatic span for the determination of the resistance. The span length should be taken as:

- $0{,}8L$ for internal spans;
- $0{,}9L$ for external spans.

(7) If the partial connection method is used it should be shown that at any cross-section the design bending moment M_{Ed} does not exceed the design resistance M_{Rd}.

(8) The design resistance M_{Rd} should be determined as given in 9.7.2(6) but with N_{cf} replaced by:

$$N_c = \tau_{u,Rd}\, b\, L_x \leq N_{cf} \tag{9.8}$$

and:

$$z = h - 0{,}5\, x_{pl} - e_p + \left(e_p - e\right)\frac{N_c}{A_{pe}\, f_{yp,d}} \tag{9.9}$$

where:

$\tau_{u,Rd}$ is the design shear strength ($\tau_{u,Rk}/\gamma_{Vs}$) obtained from slab tests meeting the basic requirements of the partial interaction method;

L_x is the distance of the cross-section being considered to the nearest support.

Note 1: The value for γ_{VS} may be given in the National Annex. The recommended value for γ_{VS} is 1,25.

Note 2: The test method as given in Annex B may be assumed to meet the basic requirements for the determination of $\tau_{u,Rd}$

(9) In expression (9.8) N_c may be increased by μR_{Ed} provided that $\tau_{u,Rd}$ is determined taking into account the additional longitudinal shear resistance caused by the support reaction, where:

R_{Ed} is the support reaction,

μ is a nominal factor.

Note: The value for μ may be given in the National Annex. The recommended value for μ is 0,5.

(10) In the partial connection method additional bottom reinforcement may be taken into account.

9.7.4 Longitudinal shear for slabs with end anchorage

(1) Unless a contribution to longitudinal shear resistance by other shear devices is shown by testing, the end anchorage of type (c), as defined in 9.1.2.1, should be designed for the tensile force in the steel sheet at the ultimate limit state.

(2) The design resistance against longitudinal shear of slabs with end anchorage of types (c) and (d), as defined in 9.1.2.1, may be determined by the partial connection method as given in 9.7.3(7) with N_c increased by the design resistance of the end anchorage.

(3) The design resistance $P_{pb,Rd}$ of a headed stud welded through the steel sheet used for end anchorage should be taken as the smaller of the design shear resistance of the stud in accordance with 6.6.4.2 or the bearing resistance of the sheet determined with the following expression:

$$P_{pb,Rd} = k_\varphi \, d_{do} \, t \, f_{yp,d} \tag{9.10}$$

with:

$$k_\varphi = 1 + a / d_{do} \leq 6{,}0 \tag{9.11}$$

where:

d_{do} is the diameter of the weld collar which may be taken as 1,1 times the diameter of the shank of the stud;

a is the distance from the centre of the stud to the end of the sheeting, to be not less than 1,5 d_{do};

t is the thickness of the sheeting.

9.7.5 Vertical shear

(1) The vertical shear resistance $V_{v,Rd}$ of a composite slab over a width equal to the distance between centres of ribs, should be determined in accordance with EN 1992-1-1, 6.2.2.

9.7.6 Punching shear

(1) The punching shear resistance $V_{p,Rd}$ of a composite slab at a concentrated load should be determined in accordance with EN 1992-1-1, 6.4.4, where the critical perimeter should be determined as shown in Figure 9.8.

9.8 Verification of composite slabs for serviceability limit states

9.8.1 Control of cracking of concrete

(1) The crack width in hogging moment regions of continuous slabs should be checked in accordance with EN 1992-1-1, 7.3.

(2) Where continuous slabs are designed as simply-supported in accordance with 9.4.2(5), the cross-sectional area of the anti-crack reinforcement above the ribs should be not less than 0,2% of the cross-sectional area of the concrete above the ribs for un-propped construction and 0,4% of this cross-sectional area for propped construction.

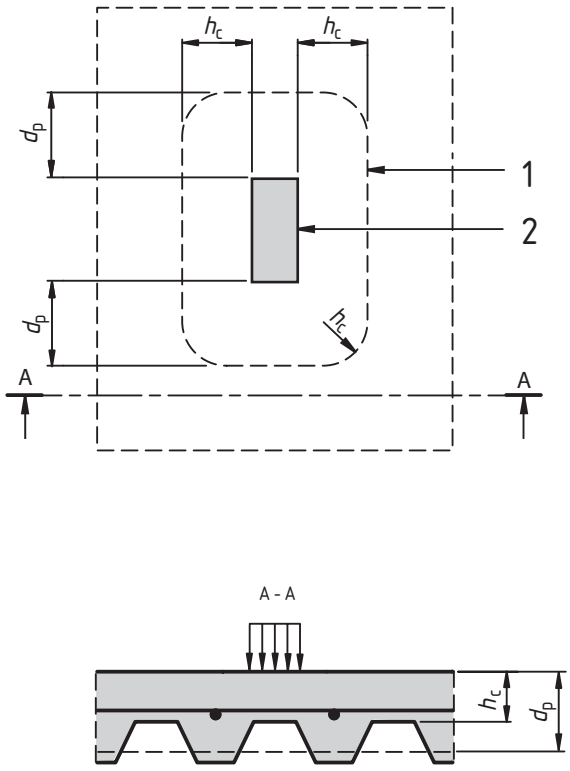

section A-A

Key

1 critical perimeter c_p

2 loaded area

Figure 9.8 : Critical perimeter for punching shear

9.8.2 Deflection

(1) EN 1990, 3.4.3, applies.

(2) Deflections due to loading applied to the steel sheeting alone should be calculated in accordance with EN 1993-1-3, Section 7.

(3) Deflections due to loading applied to the composite member should be calculated using elastic analysis in accordance with Section 5, neglecting the effects of shrinkage.

(4) Calculations of deflections may be omitted if both:

- the span to depth ratio does not exceed the limits given in EN 1992-1-1, 7.4, for lightly stressed concrete, and
- the condition of (6) below, for neglect of the effects of end slip, is satisfied.

(5) For an internal span of a continuous slab where the shear connection is as defined in 9.1.2.1(a), (b) or (c), the deflection may be determined using the following approximations:

- the second moment of area may be taken as the average of the values for the cracked and un-cracked section;
- for concrete, an average value of the modular ratio for both long- and short-term effects may be used.

(6) For external spans, no account need be taken of end slip if the initial slip load in tests (defined as the load causing an end slip of 0,5 mm) exceeds 1,2 times the design service load.

(7) Where end slip exceeding 0,5 mm occurs at a load below 1,2 times the design service load, then end anchors should be provided. Alternatively deflections should be calculated including the effect of end slip.

(8) If the influence of the shear connection between the sheeting and the concrete is not known from experimental verification for a composite floor with end anchorage, the design should be simplified to an arch with a tensile bar. From that model, the lengthening and shortening gives the deflection that should be taken into account.

Annex A (Informative)

Stiffness of joint components in buildings

A.1 Scope

(1) The stiffness of the following basic joint components may be determined in accordance with A.2.1 below:

- longitudinal steel reinforcement in tension;
- steel contact plate in compression.

(2) Stiffness coefficients k_i are defined by EN 1993-1-8, expression (6.27). The stiffness of components identified in that Standard may be taken as given therein, except as given in A.2.2 below.

(3) The stiffness of concrete encased webs in steel column sections may be determined in accordance with A.2.3 below.

(4) The influence of slip of the shear connection on joint stiffness may be determined in accordance with A.3.

A.2 Stiffness coefficients

A.2.1 Basic joint components

A.2.1.1 Longitudinal steel reinforcement in tension

(1) The stiffness coefficient $k_{s,r}$ for a row r may be obtained from Table A.1.

A.2.1.2 Steel contact plate in compression

(1) The stiffness coefficient may be taken as equal to infinity.

Table A.1 : Stiffness coefficient $k_{s,r}$

Configuration	Loading	Stiffness coefficient
Single-sided	-	$k_{s,r} = \dfrac{A_{s,r}}{3{,}6\,h}$
Double-sided	$M_{Ed,1} = M_{Ed,2}$	$k_{s,r} = \dfrac{A_{s,r}}{(h/2)}$
	$M_{Ed,1} > M_{Ed,2}$	For the joint with $M_{Ed,1}$: $k_{s,r} = \dfrac{A_{s,r}}{h\left(\dfrac{1+\beta}{2} + K_\beta\right)}$ with: $K_\beta = \beta\left(4{,}3\beta^2 - 8{,}9\beta + 7{,}2\right)$
		For the joint with $M_{Ed,2}$: $k_{s,r} = \dfrac{A_{s,r}}{h\left(\dfrac{1-\beta}{2}\right)}$

$A_{s,r}$ is the cross-sectional area of the longitudinal reinforcement in row r within the effective width of the concrete flange determined for the cross-section at the connection according to 5.4.1.2;

$M_{Ed,i}$ is the design bending moment applied to a connection i by a connected beam, see Figure A.1;

h is the depth of the column's steel section, see Figure 6.17;

β is the transformation parameter given in EN 1993-1-8, 5.3.

Note: The stiffness coefficient for $M_{Ed,1} = M_{Ed,2}$ is applicable to a double-sided beam-to-beam joint configuration under the same loading condition, provided that the breadth of the flange of the supporting primary beam replaces the depth h of the column section.

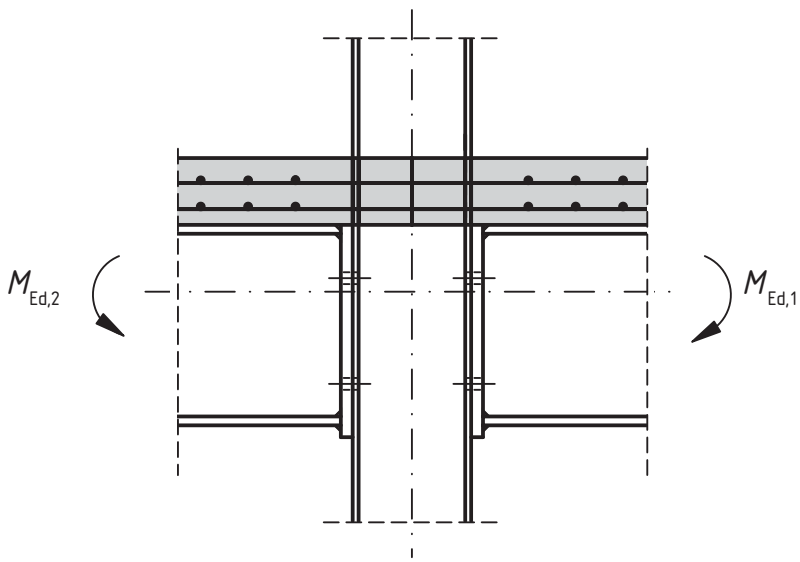

Figure A.1 : Joints with bending moments

A.2.2 Other components in composite joints

A.2.2.1 Column web panel in shear

(1) For an unstiffened panel in a joint with a steel contact plate connection, the stiffness coefficient k_1 may be taken as 0,87 times the value given in EN 1993-1-8, Table 6.11.

A.2.2.2 Column web in transverse compression

(1) For an un-stiffened web and a contact plate connection, the stiffness coefficient k_2 may be determined from:

$$k_2 = \frac{0{,}2\, b_{\mathrm{eff,c,wc}}\, t_{\mathrm{wc}}}{d_{\mathrm{c}}} \qquad \text{(A.1)}$$

where:

$b_{\mathrm{eff,c,wc}}$ is the effective width of the column web in compression, see 8.4.3.1.

Other terms are defined in EN 1993-1-8, 6.

A.2.3 Reinforced components

A.2.3.1 Column web panel in shear

(1) Where the steel column web is encased in concrete, see Figure 6.17b, the stiffness of the panel may be increased to allow for the encasement. The addition $k_{1,\mathrm{c}}$ to the stiffness coefficient k_1 may be determined from:

$$k_{1,\mathrm{c}} = 0{,}06 \frac{E_{\mathrm{cm}}}{E_{\mathrm{a}}} \frac{b_{\mathrm{c}}\, h_{\mathrm{c}}}{\beta\, z} \qquad \text{(A.2)}$$

where:

E_{cm} is the modulus of elasticity for concrete;

z is the lever arm, see EN 1993-1-8, Figure 6.15.

A.2.3.2 Column web in transverse compression

(1) Where the steel column web is encased in concrete, see Figure 6.17b, the stiffness of the column web in compression may be increased to allow for the encasement.

(2) For a contact plate connection, the addition $k_{2,\mathrm{c}}$ to the stiffness coefficient k_2 may be determined from:

$$k_{2,c} = 0{,}13 \frac{E_{cm}}{E_a} \frac{t_{eff,c}\, b_c}{h_c} \qquad \text{(A.3)}$$

where:

$t_{\mathrm{eff,c}}$ is the effective thickness of concrete, see 8.4.4.2(2).

(3) For an end plate connection, the addition $k_{2,\mathrm{c}}$ may be determined from:

$$k_{2,c} = 0{,}5\frac{E_{cm}}{E_a}\frac{t_{eff,c}\,b_c}{h_c} \tag{A.4}$$

A.3 Deformation of the shear connection

(1) Unless account is taken of deformation of the shear connection by a more exact method, the influence of slip on the stiffness of the joint may be determined by (2) - (5) below.

(2) The stiffness coefficient $k_{s,r}$, see A.2.1.1, may be multiplied by the reduction factor, k_{slip}:

$$k_{slip} = \frac{1}{1 + \dfrac{E_s\,k_{s,r}}{K_{sc}}} \tag{A.5}$$

with:

$$K_{sc} = \frac{N\,k_{sc}}{\nu - \left(\dfrac{\nu - 1}{1+\xi}\right)\dfrac{h_s}{d_s}} \tag{A.6}$$

$$\nu = \sqrt{\frac{(1+\xi)\,N\,k_{sc}\,\ell\,d_s^2}{E_a\,I_a}} \tag{A.7}$$

$$\xi = \frac{E_a I_a}{d_s^2 E_s A_s} \tag{A.8}$$

where:

h_s is the distance between the longitudinal reinforcing bars in tension and the centre of compression; see EN 1993-1-8, Figure 6.15 for the centre of compression;

d_s is the distance between the longitudinal reinforcing bars in tension and the centroid of the beam's steel section;

I_a is the second moment of area of the beam's steel section;

ℓ is the length of the beam in hogging bending adjacent to the joint, which in a braced frame may be taken as 15% of the length of the span;

N is the number of shear connectors distributed over the length ℓ;

k_{sc} is the stiffness of one shear connector.

(3) The stiffness of the shear connector, k_{sc}, may be taken as $0{,}7P_{Rk}/s$, where:

P_{Rk} is the characteristic resistance of the shear connector;

s is the slip, determined from push tests in accordance with Annex B, at a load of $0{,}7P_{Rk}$.

(4) Alternatively, for a solid slab or for a composite slab in which the reduction factor k_t is unity, see 6.6.4.2, the following approximate values may be assumed for k_{sc} :

- for 19mm diameter headed studs: 100 kN/mm
- for cold-formed angles of 80mm to 100mm height: 70 kN/mm.

(5) For a composite joint with more than a single layer of reinforcement considered effective in tension, (2) above is applicable provided that the layers are represented by a single layer of

equivalent cross-sectional area and equivalent distances from the centre of compression and the centroid of the beam's steel section.

Annex B (Informative)

Standard tests

B.1 General

(1) In this Standard rules are given for:

a) tests on shear connectors in B.2 and

b) testing of composite floor slabs in B.3.

Note : These standard testing procedures are included in the absence of Guidelines for ETA. When such Guidelines have been developed this Annex can be withdrawn.

B.2 Tests on shear connectors

B.2.1 General

(1) Where the design rules in 6.6 are not applicable, the design should be based on tests, carried out in a way that provides information on the properties of the shear connection required for design in accordance with this Standard.

(2) The variables to be investigated include the geometry and the mechanical properties of the concrete slab, the shear connectors and the reinforcement.

(3) The resistance to loading, other than fatigue, may be determined by push tests in accordance with the requirements in this Annex.

(4) For fatigue tests the specimen should also be prepared in accordance with this Annex.

B.2.2 Testing arrangements

(1) Where the shear connectors are used in T-beams with a concrete slab of uniform thickness, or with haunches complying with 6.6.5.4, standard push tests may be used. In other cases specific push tests should be used.

(2) For standard push tests the dimensions of the test specimen, the steel section and the reinforcement should be as given in Figure B.1. The recess in the concrete slabs is optional.

(3) Specific push tests should be carried out such that the slabs and the reinforcement are suitably dimensioned in comparison with the beams for which the test is designed. In particular:

a) the length l of each slab should be related to the longitudinal spacing of the connectors in the composite structure;

b) the width b of each slab should not exceed the effective width of the slab of the beam;

c) the thickness h of each slab should not exceed the minimum thickness of the slab in the beam;

d) where a haunch in the beam does not comply with 6.6.5.4, the slabs of the push specimen should have the same haunch and reinforcement as the beam.

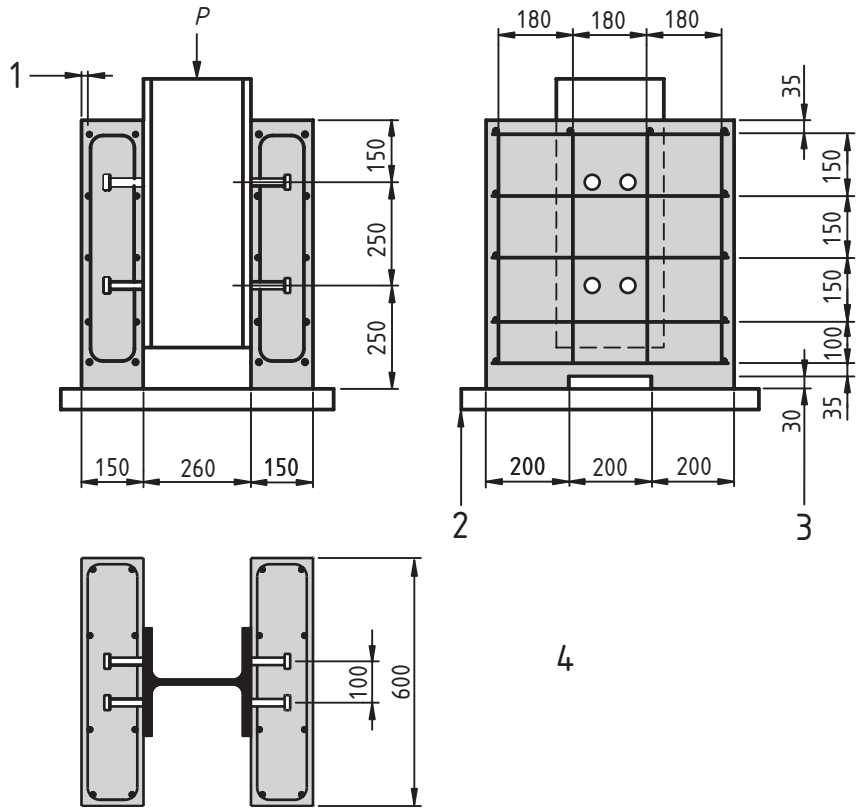

Key

1 cover 15 mm

2 bedded in mortar or gypsum

3 recess optional

4 reinforcement: ribbed bars ϕ 10 mm resulting in a high bond with $450 \leq f_{sk} \leq 550$ N/mm^2

steel section: HE 260 B or 254 x 254 x 89 kg. UC

Figure B.1 : Test specimen for standard push test

B.2.3 Preparation of specimens

(1) Each of both concrete slabs should be cast in the horizontal position, as is done for composite beams in practice.

(2) Bond at the interface between flanges of the steel beam and the concrete should be prevented by greasing the flange or by other suitable means.

(3) The push specimens should be air-cured.

(4) For each mix a minimum of four concrete specimens (cylinders or cubes) for the determination of the cylinder strength should be prepared at the time of casting the push specimens. These concrete specimens should be cured alongside the push specimens. The concrete strength f_{cm} should be taken as the mean value.

(5) The compressive strength f_{cm} of the concrete at the time of testing should be 70% ± 10% of the specified strength of the concrete f_{ck} of the beams for which the test is designed. This requirement

can be met by using concrete of the specified grade, but testing earlier than 28 days after casting of the specimens.

(6) The yield strength, the tensile strength and the maximum elongation of a representative sample of the shear connector material should be determined.

(7) If profiled steel sheeting is used for the slabs, the tensile strength and the yield strength of the profiled steel sheet should be obtained from coupon tests on specimens cut from the sheets as used in the push tests.

B.2.4 Testing procedure

(1) The load should first be applied in increments up to 40% of the expected failure load and then cycled 25 times between 5% and 40% of the expected failure load.

(2) Subsequent load increments should then be imposed such that failure does not occur in less than 15 minutes.

(3) The longitudinal slip between each concrete slab and the steel section should be measured continuously during loading or at each load increment. The slip should be measured at least until the load has dropped to 20% below the maximum load.

(4) As close as possible to each group of connectors, the transverse separation between the steel section and each slab should be measured.

B.2.5 Test evaluation

(1) If three tests on nominally identical specimens are carried out and the deviation of any individual test result from the mean value obtained from all tests does not exceed 10%, the design resistance may be determined as follows:

- the characteristic resistance P_{Rk} should be taken as the minimum failure load (divided by the number of connectors) reduced by 10%;
- the design resistance P_{Rd} should be calculated from:

$$P_{Rd} = \frac{f_u}{f_{ut}} \frac{P_{Rk}}{\gamma_V} \leq \frac{P_{Rk}}{\gamma_V} \qquad \text{(B.1)}$$

where:

f_u is the minimum specified ultimate strength of the connector material;

f_{ut} is the actual ultimate strength of the connector material in the test specimen; and

γ_V is the partial safety factor for shear connection.

Note: The value for γ_V may be given in the National Annex. The recommended value for γ_V is 1,25.

(2) If the deviation from the mean exceeds 10%, at least three more tests of the same kind should be made. The test evaluation should then be carried out in accordance with EN 1990, Annex D.

(3) Where the connector is composed of two separate elements, one to resist longitudinal shear and the other to resist forces tending to separate the slab from the steel beam, the ties which resist separation shall be sufficiently stiff and strong so that separation in push tests, measured when the

connectors are subjected to 80 % of their ultimate load, is less than half of the longitudinal movement of the slab relative to the beam.

(4) The slip capacity of a specimen δ_u should be taken as the maximum slip measured at the characteristic load level, as shown in Figure B.2. The characteristic slip capacity δ_{uk} should be taken as the minimum test value of δ_u reduced by 10% or determined by statistical evaluation from all the test results. In the latter case, the characteristic slip capacity should be determined in accordance with EN 1990, Annex D.

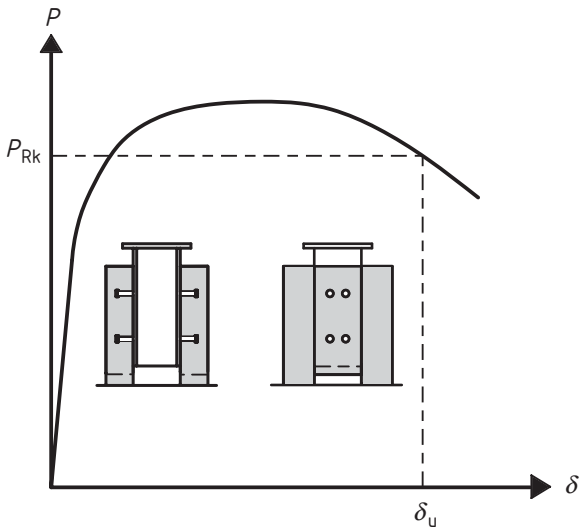

Figure B.2 : Determination of slip capacity δ_u

B.3 Testing of composite floor slabs

B.3.1 General

(1) Tests according to this section should be used for the determination of the factors *m* and *k* or the value of $\tau_{u,Rd}$ to be used for the verification of the resistance to longitudinal shear as given in Section 9.

(2) From the load-deflection curves the longitudinal shear behaviour is to be classified as brittle or ductile. The behaviour is deemed to be ductile if it is in accordance with 9.7.3(3). Otherwise the behaviour is classified as brittle.

(3) The variables to be investigated include the thickness and the type of steel sheeting, the steel grade, the coating of the steel sheet, the density and grade of concrete, the slab thickness and the shear span length L_s.

(4) To reduce the number of tests as required for a complete investigation, the results obtained from a test series may be used also for other values of variables as follows:

- for thickness of the steel sheeting t larger than tested;
- for concrete with specified strength f_{ck} not less than 0,8 f_{cm} , where f_{cm} is the mean value of the concrete strength in the tests;
- for steel sheeting having a yield strength f_{yp} not less than 0,8 f_{ypm}, where f_{ypm} is the mean value of the yield strength in the tests.

B.3.2 Testing arrangement

(1) Tests should be carried out on simply supported slabs.

(2) The test set-up should be as shown in Figure B.3 or equivalent.

(3) Two equal concentrated line loads, placed symmetrically at $L/4$ and $3L/4$ on the span, should be applied to the specimen.

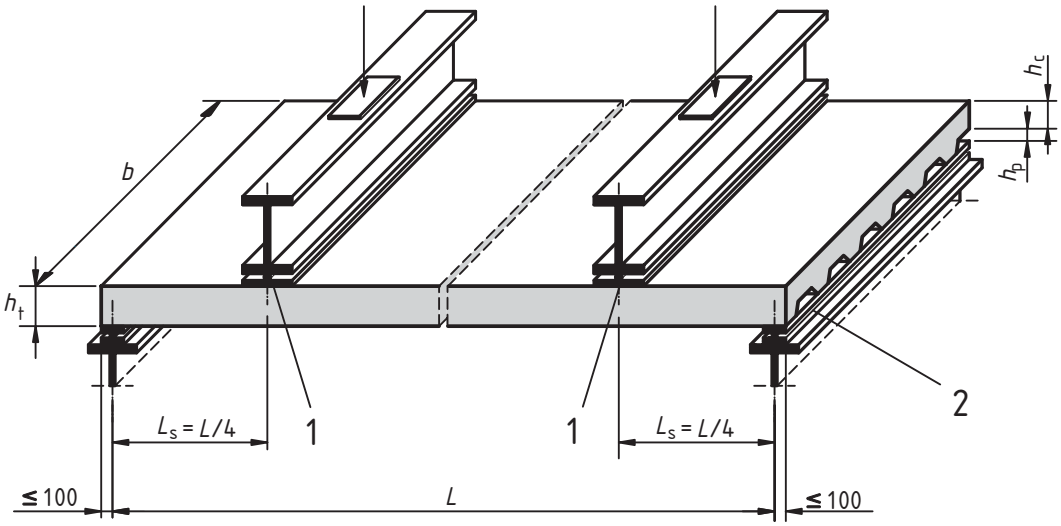

Key

1 neoprene pad or equivalent ≤ 100 mm x b

2 support bearing plate ≤ 100 mm x b x 10 mm (min) (typical for all bearing plates)

Figure B.3 : Test set-up

(4) The distance between the centre line of the supports and the end of the slab should not exceed 100 mm.

(5) The width of the bearing plates and the line loads should not exceed 100 mm.

(6) When the tests are used to determine m and k factors, for each variable to be investigated two groups of three tests (indicated in Figure B.4 by regions A and B) or three groups of two tests should be performed. For specimens in region A, the shear span should be as long as possible while still providing failure in longitudinal shear and for specimens in region B as short as possible while still providing failure in longitudinal shear, but not less than $3h_t$ in length.

(7) When the tests are used to determine $\tau_{u,Rd}$ for each type of steel sheet or coating not less than four tests should be carried out on specimens of same thickness h_t without additional reinforcement or end anchorage. In a group of three tests the shear span should be as long as possible while still providing failure in longitudinal shear and in the remaining one test as short as possible while still providing failure in longitudinal shear, but not less than $3h_t$ in length. The one test with short shear span is only used for classifying the behaviour in accordance with B.3.1(2).

B.3.3 Preparation of specimens

(1) The surface of the profiled steel sheet shall be in the 'as-rolled' condition, no attempt being made to improve the bond by degreasing the surface.

(2) The shape and embossment of the profiled sheet should accurately represent the sheets to be used in practice. The measured spacing and depth of the embossments shall not deviate from the nominal values by more than 5% and 10% respectively.

(3) In the tension zone of the slabs crack inducers should be placed across the full width of the test slab under the applied loads. The crack inducers should extend at least to the depth of the sheeting. Crack inducers are placed to better define the shear span length, L_S and to eliminate the tensile strength of concrete.

(4) It is permitted to restrain exterior webs of the deck so that they act as they would act in wider slabs.

(5) The width b of test slabs should not be less than three times the overall depth, 600mm and the cover width of the profiled sheet.

(6) Specimens should be cast in the fully supported condition. This is the most unfavourable situation for the shear bond mode of failure.

(7) Mesh reinforcement may be placed in the slab, for example to reinforce the slab during transportation, against shrinkage, etc. If placed it must be located such that it acts in compression under sagging moment.

(8) The concrete for all specimens in a series to investigate one variable should be of the same mix and cured under the same conditions.

(9) For each group of slabs that will be tested within 48 hours, a minimum of four concrete specimens, for the determination of the cylinder or cube strength, should be prepared at the time of casting the test slabs. The concrete strength f_{cm} of each group should be taken as the mean value, when the deviation of each specimen from the mean value does not exceed 10%. When the deviation of the compressive strength from the mean value exceeds 10%, the concrete strength should be taken as the maximum observed value.

(10) The tensile strength and yield strength of the profiled steel sheet should be obtained from coupon tests on specimens cut from each of the sheets used to form the test slabs.

B.3.4 Test loading procedure

(1) The test loading procedure is intended to represent loading applied over a period of time. It is in two parts consisting of an initial test, where the slab is subjected to cyclic loading; this is followed by a subsequent test, where the slab is loaded to failure under an increasing load.

(2) If two groups of three tests are used, one of the three test specimens in each group may be subjected to just the static test without cyclic loading in order to determine the level of the cyclic load for the other two.

(3) Initial test: the slab should be subjected to an imposed cyclic load, which varies between a lower value not greater than $0{,}2W_t$ and an upper value not less than $0{,}6W_t$, where W_t is the measured failure load of the preliminary static test according (2).

(4) The loading should be applied for 5000 cycles in a time not less than 3 hours.

(5) Subsequent test: on completion of the initial test, the slab should be subjected to a static test where the imposed load is increased progressively, such that failure does not occur in less than 1 hour. The failure load W_t is the maximum load imposed on the slab at failure plus the weight of the composite slab and spreader beams.

(6) In the subsequent test the load may be applied either as force-controlled or deflection-controlled.

B.3.5 Determination of design values for *m* and *k*

(1) If the behaviour is ductile, see 9.7.3(3), the representative experimental shear force V_t should be taken as 0,5 times the value of the failure load W_t as defined in B.3.4. If the behaviour is brittle this value shall be reduced, using a factor 0,8.

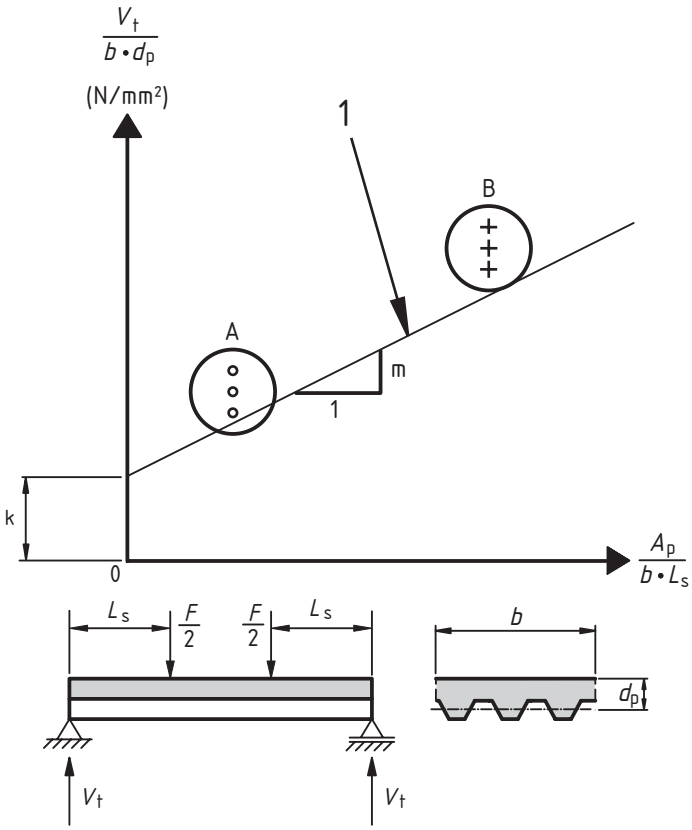

Note: b, d_p and L_s are in mm, A_p is in mm^2, V_t is in N.

Key

1 design relationship for longitudinal shear resistance

Figure B.4 : Evaluation of test results

(2) From all the test values of V_t the characteristic shear strength should be calculated as the 5% fractile by using an appropriate statistical model and drawn as a characteristic linear regression line, as shown in Figure B.4.

(3) If two groups of three tests are used and the deviation of any individual test result in a group from the mean of the group does not exceed 10%, the design relationship may be determined in accordance with Annex D of EN 1990 or as follows:

From each group the characteristic value is deemed to be the one obtained by taking the minimum value of the group reduced by 10%. The design relationship is formed by the straight line through these characteristic values for groups A and B.

B.3.6 Determination of the design values for $\tau_{u,Rd}$

(1) The partial interaction diagram as shown in Figure B.5 should be determined using the measured dimensions and strengths of the concrete and the steel sheet. For the concrete strength the mean value f_{cm} of a group as specified in B.3.3(9) may be used.

(2) From the maximum applied loads, the bending moment M at the cross-section under the point load due to the applied load, dead weight of the slab and spreader beams should be determined. The path A --> B --> C in Figure B.5 then gives a value η for each test, and a value τ_u from:

$$\tau_u = \frac{\eta N_{cf}}{b(L_s + L_o)} \tag{B.2}$$

where:

L_o is the length of the overhang.

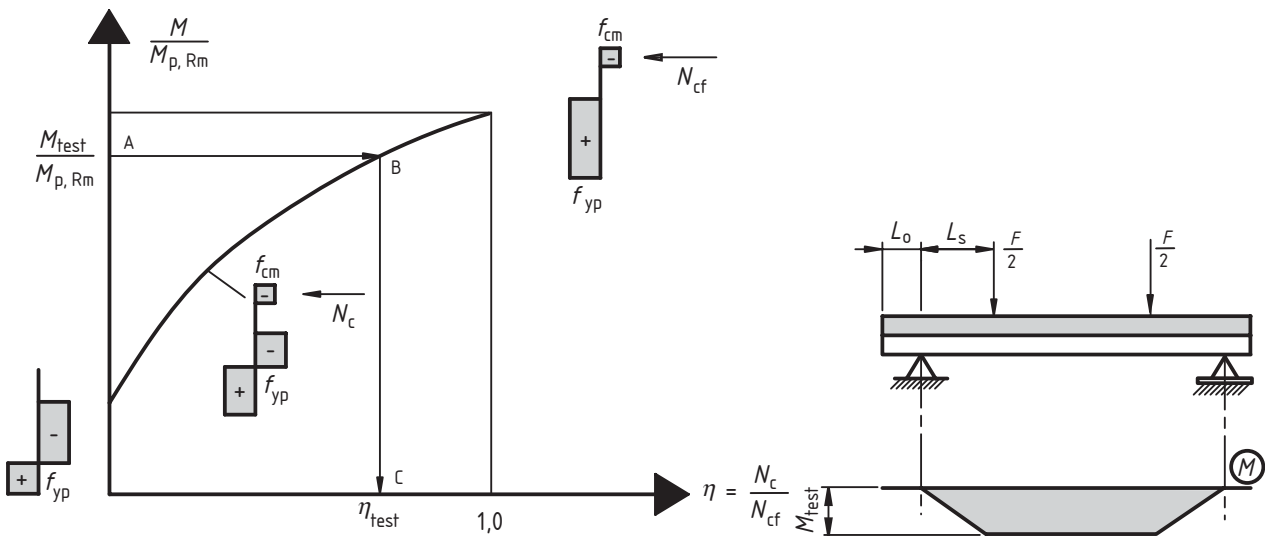

Figure B.5 : Determination of the degree of shear connection from M_{test}

(3) If in design the additional longitudinal shear resistance caused by the support reaction is taken into account in accordance with 9.7.3(9), τ_u should be determined from:

$$\tau_u = \frac{\eta N_{cf} - \mu V_t}{b(L_s + L_o)} \tag{B.3}$$

where:

μ is the default value of the friction coefficient to be taken as 0,5;

V_t is the support reaction under the ultimate test load.

(4) The characteristic shear strength $\tau_{u,Rk}$ should be calculated from the test values as the 5% fractile using an appropriate statistical model in accordance with EN 1990, Annex D.

(5) The design shear strength $\tau_{u,Rd}$ is the characteristic strength $\tau_{u,Rk}$ divided by the partial safety coefficient γ_{VS}.

Note: The value for γ_{VS} may be given in the National Annex. The recommended value for γ_{VS} is 1,25.

Annex C (Informative)

Shrinkage of concrete for composite structures for buildings

(1) Unless accurate control of the profile during execution is essential, or where shrinkage is expected to take exceptional values, the nominal value of the total final free shrinkage strain may be taken as follows in calculations for the effects of shrinkage:

– in dry environments (whether outside or within buildings but excluding concrete-filled members):

  325×10^{-6} for normal concrete

  500×10^{-6} for lightweight concrete;

– in other environments and in filled members:

  200×10^{-6} for normal concrete

  300×10^{-6} for lightweight concrete.

Bibliography

EN 1991-1-5: Actions on structures: Thermal actions-to be published.

EN 1991-1-6: Actions on structures: Actions during execution-to be published.

EN 13670: Requirements for the execution of concrete structures-to be published.

EN ISO 13918: 1998 Welding-Studs and ceramic ferrules for arc stud welding (ISO 13918:1998).

EN ISO 14555: 1998 Welding-Arc stud welding of metallic materials (ISO 14555:1998).

EUROPEAN STANDARD
NORME EUROPÉENNE
EUROPÄISCHE NORM

prEN 1994-2:2004

1 September 2004

UDC

Descriptores:

English version

Eurocode 4: Design of composite steel and concrete structures

Part 2: General rules and rules for bridges

Structures mixtes acier-beton,
calcul et construction

Partie 2:
Règles générales et
règles pour les ponts

Bemessung und Konstruktion von
Verbundtragwerken aus Stahl und Beton

Teil 2:
Allgemeine Bemessungsregeln und
Anwendungsregeln für Brücken

Stage 34

Revised Version of the Editorial Group

CEN

European Committee for Standardization
Comité Européen de Normalisation
Europäisches Komitee für Normung

Central Secretariat: rue de Stassart 36, B-1050 Brussels

© CEN 2004 Copyright reserved to all CEN members

Contents

Page

Foreword……7

Section 1 General…… **11**
1.1 Scope……11
1.1.1 Scope of Eurocode 4…….. 11
1.1.2 Scope of Part 1-1 of Eurocode 4……11
1.1.3 Scope of Part 2 of Eurocode 4…… 12
1.2 Normative references…….. 12
1.2.1 General reference standards……12
1.2.2 Other reference standards……12
1.2.3 Additional general and other reference standards for composite bridges ……..13
1.3 Assumptions…… 13
1.4 Distinction between principles and application rules…….. 14
1.5 Definitions……14
1.5.1 General……14
1.5.2 Additional terms and definitions used in this Standard…….. 14
1.5.2.1 Composite member…….. 14
1.5.2.2 Shear connection…….. 14
1.5.2.3 Composite behaviour…… 14
1.5.2.4 Composite beam……14
1.5.2.5 Composite column……14
1.5.2.6 Composite slab……..14
1.5.2.7 Composite frame…… 14
1.5.2.8 Composite joint…… 14
1.5.2.9 Propped structure or member……15
1.5.2.10 Un-propped structure or member…… 15
1.5.2.11 Un-cracked flexural stiffness…… 15
1.5.2.12 Cracked flexural stiffness…… 15
1.5.2.13 Prestress…… 15
1.5.2.14 Filler beam deck……15
1.5.2.15 Composite plate…… 15
1.6 Symbols ……..…… 15

Section 2 Basis of design…… **22**
2.1 Requirements…….. 22
2.2 Principles of limit states design…….. 22
2.3 Basic variables……22
2.3.1 Actions and environmental influences……22
2.3.2 Material and product properties…… 22
2.3.3 Classification of actions……..22
2.4 Verification by the partial factor method…… 23
2.4.1 Design values…… 23
2.4.1.1 Design values of actions……23
2.4.1.2 Design values of material or product properties……23
2.4.1.3 Design values of geometrical data…… 23
2.4.1.4 Design resistances …… 23
2.4.2 Combination of actions…….. 24
2.4.3 Verification of static equilibrium (EQU)……24

Section 3 Materials…….. **24**
3.1 Concrete…… 24
3.2 Reinforcing steel…….. 24
3.3 Structural steel…….. 24
3.4 Connecting devices…….…… 24
3.4.1 General……24
3.4.2 Headed stud shear connectors……. 24
3.5 Prestressing steel and devices……..… 25
3.6 Tension components in steel…… 25

Section 4 Durability……..……. **25**
4.1 General……. 25
4.2 Corrosion protection at the steel-concrete interface in bridges……25

Section 5 Structural analysis……..….. **25**
5.1 Structural modelling for analysis…… 25
5.1.1 Structural modelling and basic assumptions…….. 25
5.1.2 Joint modelling…… 25
5.1.3 Ground-structure interaction…….. 26
5.2 Structural stability…… 26
5.2.1 Effects of deformed geometry of the structure…… 26
5.2.2 Methods of analysis for bridges…….. 26
5.3 Imperfections…… 26
5.3.1 Basis…… 26
5.3.2 Imperfections for bridges…… 27
5.4 Calculation of action effects…… 27
5.4.1 Methods of global analysis……. 27
5.4.1.1 General……27
5.4.1.2 Effective width of flanges for shear lag……. 28
5.4.2 Linear elastic analysis……. 29
5.4.2.1 General…… 29
5.4.2.2 Creep and shrinkage…… 29
5.4.2.3 Effects of cracking of concrete……. 30
5.4.2.4 Stages and sequence of construction…….. 31
5.4.2.5 Temperature effects…… 31
5.4.2.6 Pre-stressing by controlled imposed deformations……. 32
5.4.2.7 Pre-stressing by tendons…….. 32
5.4.2.8 Tension members in composite bridges…….. 32
5.4.2.9 Filler beam decks for bridges……. 33
5.4.3 Non-linear global analysis……34
5.4.4 Combination of global and local action effects…….. 34
5.5 Classification of cross-sections…… 34
5.5.1 General…… 34
5.5.2 Classification of composite sections without concrete encasement ……35
5.5.3 Classification of sections of filler beam decks for bridges……. 36

Section 6 Ultimate limit states……...……. **36**
6.1 Beams ……. 36
6.1.1 Beams for bridges…… 36
6.1.2 Effective width for verification of cross-sections……36

6.2 Resistances of cross-sections of beams……..……..36
6.2.1 Bending resistance…… 36
6.2.1.1 General……36
6.2.1.2 Plastic resistance moment $M_{pl,Rd}$ of a composite cross-section…….. 37
6.2.1.3 Additional rules for beams in bridges…… 38
6.2.1.4 Non-linear resistance to bending…… 38
6.2.1.5 Elastic resistance to bending…….. 40
6.2.2 Resistance to vertical shear…… 40
6.2.2.1 Scope…….. 40
6.2.2.2 Plastic resistance to vertical shear…… 41
6.2.2.3 Shear buckling resistance……41
6.2.2.4 Bending and vertical shear…… 41
6.2.2.5 Additional rules for beams in bridges…… 41
6.3 Filler beam decks..... 42
6.3.1 Scope…….. 42
6.3.2 General……43
6.3.3 Bending moments…….. 43
6.3.4 Vertical shear…….. 43
6.3.5 Resistance and stability of steel beams during execution…… 44
6.4 Lateral-torsional buckling of composite beams…….. 44
6.4.1 General……44
6.4.2 Beams in bridges with uniform cross-sections in Class 1, 2 and 3……44
6.4.3 General methods for buckling of members and frames……..46
6.4.3.1 General method…….…… 46
6.4.3.2 Simplified method…….. 46
6.5 Transverse forces on webs…….. 46
6.5.1 General…….. 46
6.5.2 Flange-induced buckling of webs…….. 46
6.6 Shear connection…… 46
6.6.1 General……46
6.6.1.1 Basis of design……46
6.6.1.2 Ultimate limit states other than fatigue…….. 47
6.6.2 Longitudinal shear force in beams for bridges…….. 47
6.6.2.1 Beams in which elastic or non-linear theory is used for resistances of cross-sections……47
6.6.2.2 Beams in bridges with some cross-sections in Class 1 or 2 and inelastic behaviour…….. 48
6.6.2.3 Local effects of concentrated longitudinal shear force due to load introduction of longitudinal forces……. 49
6.6.2.4 Local effects of concentrated longitudinal shear force at sudden change of cross-section……. 50
6.6.3 Headed stud connectors in solid slabs and concrete encasement…….. 51
6.6.3.1 Design resistance…… 51
6.6.3.2 Influence of tension on shear resistance……52
6.6.4 Headed studs that cause splitting in the direction of the slab thickness……52
6.6.5 Detailing of the shear connection and influence of execution…….. 52
6.6.5.1 Resistance to separation…… 52
6.6.5.2 Cover and concreting…… 52
6.6.5.3 Local reinforcement in the slab…… 53
6.6.5.4 Haunches other than formed by profiled steel sheeting…….…… 53

6.6.5.5 Spacing of connectors…… 53
6.6.5.6 Dimensions of the steel flange…… 54
6.6.5.7 Headed stud connectors…… 54
6.6.6 Longitudinal shear in concrete slabs…… 55
6.6.6.1 General…… 55
6.6.6.2 Design resistance to longitudinal shear…… 55
6.6.6.3 Minimum transverse reinforcement…… 56
6.7 Composite columns and composite compression members…… 56
6.7.1 General…… 56
6.7.2 General method of design …… 58
6.7.3 Simplified method of design…… 58
6.7.3.1 General and scope…… 58
6.7.3.2 Resistance of cross-sections……59
6.7.3.3 Effective flexural stiffness, steel contribution ratio and relative slenderness…… 61
6.7.3.4 Methods of analysis and member imperfections…… 62
6.7.3.5 Resistance of members in axial compression…… 63
6.7.3.6 Resistance of members in combined compression and uniaxial bending…… 65
6.7.3.7 Combined compression and biaxial bending…… 65
6.7.4 Shear connection and load introduction…… 66
6.7.4.1 General…… 66
6.7.4.2 Load introduction…… 66
6.7.4.3 Longitudinal shear outside the areas of load introduction…… 69
6.7.5 Detailing Provisions…… 70
6.7.5.1 Concrete cover of steel profiles and reinforcement…… 70
6.7.5.2 Longitudinal and transverse reinforcement…… 70
6.8 Fatigue…… 71
6.8.1 General…… 71
6.8.2 Partial factors for fatigue assessment for bridges…… 71
6.8.3 Fatigue strength…… 71
6.8.4 Internal forces and fatigue loadings…… 72
6.8.5 Stresses …… 72
6.8.5.1 General…… 72
6.8.5.2 Concrete…… 73
6.8.5.3 Structural steel…… 73
6.8.5.4 Reinforcement…… 73
6.8.5.5 Shear connection…… 74
6.8.5.6 Stresses in reinforcement and prestressing steel in members prestressed by bonded tendons…… 74
6.8.6 Stress ranges…… 74
6.8.6.1 Structural steel and reinforcement…… 74
6.8.6.2 Shear connection…… 75
6.8.7 Fatigue assessment based on nominal stress ranges…… 75
6.8.7.1 Structural steel, reinforcement, and concrete…… 75
6.8.7.2 Shear connection…… 76
6.9 Tension members in composite bridges…… 77

Section 7 Serviceability limit states…… **77**
7.1 General…… 77
7.2 Stresses…… 78
7.2.1 General…… 78
7.2.2 Stress limitation for bridges…… 78
7.2.3 Web breathing…… 78
7.3 Deformations in bridges…… 79
7.3.1 Deflections…… 79
7.3.2 Vibrations…… 79
7.4 Cracking of concrete…… 79
7.4.1 General…… 79
7.4.2 Minimum reinforcement…… 80
7.4.3 Control of cracking due to direct loading…… 82
7.5 Filler beam decks…… 83
7.5.1 General…… 83
7.5.2 Cracking of concrete…… 83
7.5.3 Minimum reinforcement…… 83
7.5.4 Control of cracking due to direct loading…… 83

Section 8 Precast concrete slabs in composite bridges…… **83**
8.1 General…… 83
8.2 Actions…… 84
8.3 Design, analysis and detailing of the bridge slab…… 84
8.4 Interface between steel beam and concrete slab…… 84
8.4.1 Bedding and tolerances…… 84
8.4.2 Corrosion…… 84
8.4.3 Shear connection and transverse reinforcement…… 84

Section 9 Composite plates in bridges…… **85**
9.1 General…… 85
9.2 Design for local effects…… 85
9.3 Design for global effects…… 85
9.4 Design of shear connectors…… 86

Annex C (Informative) Headed studs that cause splitting forces in the direction of the slab thickness…… **88**
C.1 Static strength and detailing…… 88
C.2 Fatigue strength…… 89

Foreword

This document (EN 1994-2:2004), Eurocode 4: Design of composite steel and concrete structures, Part 2: General rules and rules for bridges, has been prepared on behalf of Technical Committee CEN/TC 250 "Structural Eurocodes", the Secretariat of which is held by BSI.

This European Standard shall be given the status of a national standard, either by publication of an identical text or by endorsement, at the latest by **MM/YY**, and conflicting national standards shall be withdrawn at the latest by March 2010.

This document supersedes ENV 1994-2:1994.

CEN/TC 250 is responsible for all Structural Eurocodes.

According to the CEN/CENELEC Internal Regulations, the national standards organizations of the following countries are bound to implement this European Standard: Austria, Belgium, Cyprus, Czech Republic, Denmark, Estonia, Finland, France, Germany, Greece, Hungary, Iceland, Ireland, Italy, Latvia, Lithuania, Luxembourg, Malta, the Netherlands, Norway, Poland, Portugal, Slovakia, Slovenia, Spain, Sweden, Switzerland and the United Kingdom.

Background of the Eurocode programme

In 1975, the Commission of the European Community decided on an action programme in the field of construction, based on article 95 of the Treaty. The objective of the programme was the elimination of technical obstacles to trade and the harmonisation of technical specifications.

Within this action programme, the Commission took the initiative to establish a set of harmonised technical rules for the design of construction works which, in a first stage, would serve as an alternative to the national rules in force in the Member States and, ultimately, would replace them.

For fifteen years, the Commission, with the help of a Steering Committee with Representatives of Member States, conducted the development of the Eurocodes programme, which led to the first generation of European codes in the 1980s.

In 1989, the Commission and the Member States of the EU and EFTA decided, on the basis of an agreement[1] between the Commission and CEN, to transfer the preparation and the publication of the Eurocodes to CEN through a series of Mandates, in order to provide them with a future status of European Standard (EN). This links *de facto* the Eurocodes with the provisions of all the Council's Directives and/or Commission's Decisions dealing with European standards (*e.g.* the Council Directive 89/106/EEC on construction products - CPD - and Council Directives 93/37/EEC, 92/50/EEC and 89/440/EEC on public works and services and equivalent EFTA Directives initiated in pursuit of setting up the internal market).

The Structural Eurocode programme comprises the following standards generally consisting of a number of Parts:

EN 1990	Eurocode :	Basis of Structural Design
EN 1991	Eurocode 1:	Actions on structures
EN 1992	Eurocode 2:	Design of concrete structures
EN 1993	Eurocode 3:	Design of steel structures

[1] Agreement between the Commission of the European Communities and the European Committee for Standardisation (CEN) concerning the work on EUROCODES for the design of building and civil engineering works (BC/CEN/03/89).

EN 1994	Eurocode 4:	Design of composite steel and concrete structures
EN 1995	Eurocode 5:	Design of timber structures
EN 1996	Eurocode 6:	Design of masonry structures
EN 1997	Eurocode 7:	Geotechnical design
EN 1998	Eurocode 8:	Design of structures for earthquake resistance
EN 1999	Eurocode 9:	Design of aluminium structures

Eurocode standards recognise the responsibility of regulatory authorities in each Member State and have safeguarded their right to determine values related to regulatory safety matters at national level where these continue to vary from State to State.

Status and field of application of Eurocodes

The Member States of the EU and EFTA recognise that Eurocodes serve as reference documents for the following purposes:

– as a means to prove compliance of building and civil engineering works with the essential requirements of Council Directive 89/106/EEC, particularly Essential Requirement N°1 – Mechanical resistance and stability – and Essential Requirement N°2 – Safety in case of fire ;

– as a basis for specifying contracts for construction works and related engineering services ;

– as a framework for drawing up harmonised technical specifications for construction products (ENs and ETAs)

The Eurocodes, as far as they concern the construction works themselves, have a direct relationship with the Interpretative Documents[2] referred to in Article 12 of the CPD, although they are of a different nature from harmonised product standards[3]. Therefore, technical aspects arising from the Eurocodes work need to be adequately considered by CEN Technical Committees and/or EOTA Working Groups working on product standards with a view to achieving full compatibility of these technical specifications with the Eurocodes.

The Eurocode standards provide common structural design rules for everyday use for the design of whole structures and component products of both a traditional and an innovative nature. Unusual forms of construction or design conditions are not specifically covered and additional expert consideration will be required by the designer in such cases.

National Standards implementing Eurocodes

The National Standards implementing Eurocodes will comprise the full text of the Eurocode (including any annexes), as published by CEN, which may be preceded by a National title page and National foreword, and may be followed by a National annex.

[2] According to Art. 3.3 of the CPD, the essential requirements (ERs) shall be given concrete form in interpretative documents for the creation of the necessary links between the essential requirements and the mandates for harmonised ENs and ETAGs/ETAs.

[3] According to Art. 12 of the CPD the interpretative documents shall :

a) give concrete form to the essential requirements by harmonising the terminology and the technical bases and indicating classes or levels for each requirement where necessary ;

b) indicate methods of correlating these classes or levels of requirement with the technical specifications, *e.g.* methods of calculation and of proof, technical rules for project design, etc. ;

c) serve as a reference for the establishment of harmonised standards and guidelines for European technical approvals.

The Eurocodes, *de facto*, play a similar role in the field of the ER 1 and a part of ER 2.

The National annex may only contain information on those parameters which are left open in the Eurocode for national choice, known as Nationally Determined Parameters, to be used for the design of buildings and civil engineering works to be constructed in the country concerned, *i.e.*:

- values and/or classes where alternatives are given in the Eurocode,
- values to be used where a symbol only is given in the Eurocode,
- country specific data (geographical, climatic, etc.), e.g. snow map,
- the procedure to be used where alternative procedures are given in the Eurocode.

It may also contain

- decisions on the use of informative annexes, and
- references to non-contradictory complementary information to assist the user to apply the Eurocode.

Links between Eurocodes and harmonised technical specifications (ENs and ETAs) for products

There is a need for consistency between the harmonised technical specifications for construction products and the technical rules for works[4]. Furthermore, all the information accompanying the CE Marking of the construction products which refer to Eurocodes shall clearly mention which Nationally Determined Parameters have been taken into account.

Additional information specific to EN 1994-2

EN 1994-2 describes the Principles and requirements for safety, serviceability and durability of composite steel and concrete structures, together with specific provisions for bridges. It is based on the limit state concept used in conjunction with a partial factor method.

EN 1994-2 is intended for use by:

– committees drafting other standards for structural design and related product, testing and execution standards ;
– clients (e.g. for the formulation of their specific requirements on reliability levels and durability);
– designers and constructors ;
– relevant authorities.

EN 1994-2 contains the general rules from EN 1994-1-1 und specific rules for the design of composite steel and concrete bridges or composite members of bridges.

EN 1994-2 is intended to be used with EN 1990, the relevant parts of EN 1991, EN 1993 for the design of steel structures and EN 1992 for the design of concrete structures.

Numerical values for partial factors and other reliability parameters are recommended as basic values that provide an acceptable level of reliability. They have been selected assuming that an appropriate level of workmanship and of quality management applies. When EN 1994-2 is used as a base document by other CEN/TCs the same values need to be taken.

[4] see Art.3.3 and Art.12 of the CPD, as well as clauses 4.2, 4.3.1, 4.3.2 and 5.2 of ID 1.

National annex for EN 1994-2

This standard gives alternative procedures, values and recommendations for classes with notes indicating where national choices may have to be made. Therefore, the National Standard implementing EN 1994-2 should have a National annex containing all Nationally Determined Parameters to be used for the design of bridges to be constructed in the relevant country.

National choice is allowed in the general rules coming from EN 1994-1-1 through the following clauses: - 2.4.1.1(1) - 2.4.1.2(5) - 6.6.3.1(1) - 6.8.2(1)	National choice is allowed for the specific rules for bridges through the following clauses: 1.1.3(3) 2.4.1.2(6) 5.4.4(1) 6.2.1.5(9) 6.2.2.5(3) 6.3.1(1) 6.6.1.1(13) 6.6.4(1) 6.8.1(3) 6.8.2(2) 7.4.1(6) 8.4.3(3)

Section 1 General

1.1 Scope

1.1.1 Scope of Eurocode 4

(1) Eurocode 4 applies to the design of composite structures and members for buildings and civil engineering works. It complies with the principles and requirements for the safety and serviceability of structures, the basis of their design and verification that are given in EN 1990 – Basis of structural design.

(2) Eurocode 4 is concerned only with requirements for resistance, serviceability, durability and fire resistance of composite structures. Other requirements, e.g. concerning thermal or sound insulation, are not considered.

(3) Eurocode 4 is intended to be used in conjunction with:

EN 1990 Basis of structural design

EN 1991 Actions on structures

ENs, hENs, ETAGs and ETAs for construction products relevant for composite structures

EN 1090 Execution of steel structures – Technical requirements

EN 13670 Execution of concrete structures

EN 1992 Design of concrete structures

EN 1993 Design of steel structures

EN 1997 Geotechnical design

EN 1998 Design of structures for earthquake resistance, when composite structures are built in seismic regions.

(4) Eurocode 4 is subdivided in various parts:

Part 1-1: General rules and rules for buildings

Part 1-2: Structural fire design

Part 2: General rules and rules for bridges.

1.1.2 Scope of Part 1-1 of Eurocode 4

(1) Part 1-1 of Eurocode 4 gives a general basis for the design of composite structures together with specific rules for buildings.

(2) The following subjects are dealt with in Part 1-1:

Section 1: General
Section 2: Basis of design
Section 3: Materials
Section 4: Durability
Section 5: Structural analysis
Section 6: Ultimate limit states
Section 7: Serviceability limit states
Section 8: Composite joints in frames for buildings
Section 9: Composite slabs with profiled steel sheeting for buildings

1.1.3 Scope of Part 2 of Eurocode 4

(1) Part 2 of Eurocode 4 gives design rules for steel-concrete composite bridges or members of bridges, additional to the general rules in EN 1994-1-1. Cable stayed bridges are not fully covered by this part.

(2) The following subjects are dealt with in Part 2:

Section 1: General
Section 2: Basis of design
Section 3: Materials
Section 4: Durability
Section 5: Structural analysis
Section 6: Ultimate limit states
Section 7: Serviceability limit states
Section 8: Decks with precast concrete slabs
Section 9: Composite plates in bridges

(3) Provisions for shear connectors are given only for welded headed studs.

NOTE: Reference to guidance for other types as shear connectors may be given in the National Annex.

1.2 Normative references

The following normative documents contain provisions which, through references in this text, constitute provisions of this European standard. For dated references, subsequent amendments to or revisions of any of these publications do not apply. However, parties to agreements based on this European standard are encouraged to investigate the possibility of applying the most recent editions of the normative documents indicated below. For undated references the latest edition of the normative document referred to applies.

1.2.1 General reference standards

EN 1090-2[1)] Technical rules for the execution of steel structures

EN 1990: 2002 Basis of structural design.

1.2.2 Other reference standards

EN 1992-1-1 [1] Design of concrete structures: General rules and rules for buildings

EN 1993-1-1 [1] Design of steel structures: General rules and rules for buildings

EN 1993-1-3 [1] Design of steel structures: Cold-formed thin gauge members and sheeting

EN 1993-1-5 [1] Design of steel structures: Plated structural elements

[1] To be published

EN 1993-1-8 [1]	Design of steel structures: Design of joints
EN 1993-1-9 [1]	Design of steel structures: Fatigue strength of steel structures
EN 1993-1-11 [1]	Design of structures with tension components
EN 10025-1: 2002	Hot-rolled products of structural steels: General delivery conditions
EN 10025-2: 2002	Hot-rolled products of structural steels: Technical delivery conditions for non-alloy structural steels
EN 10025-3: 2002	Hot-rolled products of structural steels: Technical delivery conditions for normalized/normalized rolled weldable fine grain structural steels
EN 10025-4: 2002	Hot-rolled products of structural steels: Technical delivery conditions for thermomechanical rolled weldable fine grain structural steels
EN 10025-5: 2002	Hot-rolled products of structural steels: Technical delivery conditions for structural steels with improved atmospheric corrosion resistance
EN 10025-6: 2002	Hot-rolled products of structural steels: Technical delivery conditions for flat products of high yield strength structural steels in the quenched and tempered condition
EN 10147: 2000	Continuously hot-dip zinc coated structural steels strip and sheet: Technical delivery conditions
EN 10149-2: 1995	Hot-rolled flat products made of high yield strength steels for cold-forming: Delivery conditions for thermomechanically rolled steels
EN 10149-3: 1995	Hot-rolled flat products made of high yield strength steels for cold-forming: Delivery conditions for normalised or normalised rolled steels
EN ISO 13918: 1998	Studs and ceramic ferrules for arc stud welding
EN ISO 14555: 1998	Arc stud welding of metallic materials

1.2.3 Additional general and other reference standards for composite bridges

EN 1990:Annex 2 [1]	Basis of structural design : Application for bridges
EN 1991-2:[1]x	Actions on structures : Traffic loads on bridges
EN 1992-2[1]	Design of concrete structures. Part 2 – Bridges
EN 1993-2 [1]	Design of steel structures. Part 2 – Bridges

1.3 Assumptions

(1) In addition to the general assumptions of EN 1990 the following assumptions apply:

– those given in clauses 1.3 of EN1992-1-1 and EN1993-1-1.

[1] To be published

1.4 Distinction between principles and application rules

(1) The rules in EN 1990, 1.4 apply.

1.5 Definitions

1.5.1 General

(1) The terms and definitions given in EN 1990, 1.5, EN 1992-1-1, 1.5 and EN 1993-1-1, 1.5 apply.

1.5.2 Additional terms and definitions used in this Standard

1.5.2.1 Composite member

A structural member with components of concrete and of structural or cold-formed steel, interconnected by shear connection so as to limit the longitudinal slip between concrete and steel and the separation of one component from the other.

1.5.2.2 Shear connection

An interconnection between the concrete and steel components of a composite member that has sufficient strength and stiffness to enable the two components to be designed as parts of a single structural member.

1.5.2.3 Composite behaviour

Behaviour which occurs after the shear connection has become effective due to hardening of concrete.

1.5.2.4 Composite beam

A composite member subjected mainly to bending.

1.5.2.5 Composite column

A composite member subjected mainly to compression or to compression and bending.

1.5.2.6 Composite slab

A slab in which profiled steel sheets are used initially as permanent shuttering and subsequently combine structurally with the hardened concrete and act as tensile reinforcement in the finished floor.

1.5.2.7 Composite frame

A framed structure in which some or all of the elements are composite members and most of the remainder are structural steel members.

1.5.2.8 Composite joint

A joint between a composite member and another composite, steel or reinforced concrete member, in which reinforcement is taken into account in design for the resistance and the stiffness of the joint.

1.5.2.9 Propped structure or member

A structure or member where the weight of concrete elements is applied to the steel elements which are supported in the span, or is carried independently until the concrete elements are able to resist stresses.

1.5.2.10 Un-propped structure or member

A structure or member in which the weight of concrete elements is applied to steel elements which are unsupported in the span.

1.5.2.11 Un-cracked flexural stiffness

The stiffness $E_a I_1$ of a cross-section of a composite member where I_1 is the second moment of area of the effective equivalent steel section calculated assuming that concrete in tension is un-cracked.

1.5.2.12 Cracked flexural stiffness

The stiffness $E_a I_2$ of a cross-section of a composite member where I_2 is the second moment of area of the effective equivalent steel section calculated neglecting concrete in tension but including reinforcement.

1.5.2.13 Prestress

The process of applying compressive stresses to the concrete part of a composite member, achieved by tendons or by controlled imposed deformations.

1.5.2.14 Filler beam deck

A deck consisting of a reinforced concrete slab and partially concrete-encased rolled or welded steel beams, having their bottom flange on the level of the slab bottom.

1.5.2.15 Composite plate

Composite member consisting of a flat bottom steel plate connected to a concrete slab, in which both the length and width are much larger than the thickness of the composite plate.

1.6 Symbols

For the purpose of this Standard the following symbols apply.

Latin upper case letters

A	Cross-sectional area of the effective composite section neglecting concrete in tension
A_a	Cross-sectional area of the structural steel section
A_b	Cross-sectional area of bottom transverse reinforcement
A_{bh}	Cross-sectional area of bottom transverse reinforcement in a haunch
A_c	Cross-sectional area of concrete
A_{ct}	Cross-sectional area of the tensile zone of the concrete
A_{fc}	Cross-sectional area of the compression flange
A_p	Area of prestressing steel
A_s	Cross-sectional area of reinforcement
A_{sf}	Cross-sectional area of transverse reinforcement
A_t	Cross-sectional area of top transverse reinforcement
A_v	Shear area of a structural steel section

A_1	Loaded area under the gusset plate
E_a	Modulus of elasticity of structural steel
$E_{c,eff}$	Effective modulus of elasticity for concrete
E_{cm}	Secant modulus of elasticity of concrete
E_s	Design value of modulus of elasticity of reinforcing steel
$(EA)_{eff}$	Effective longitudinal stiffness of cracked concrete
$(EI)_{eff}$	Effective flexural stiffness for calculation of relative slenderness
$(EI)_{eff,II}$	Effective flexural stiffness for use in second-order analysis
$(EI)_2$	Cracked flexural stiffness per unit width of the concrete or composite slab
F_d	Component in the direction of the steel beam of the design force of a bonded or unbonded tendon applied after the shear connection has become effective
F_ℓ	Design longitudinal force per stud
F_t	Design transverse force per stud
F_{ten}	Design tensile force per stud
G_a	Shear modulus of structural steel
G_c	Shear modulus of concrete
I	Second moment of area of the effective composite section neglecting concrete in tension
I_a	Second moment of area of the structural steel section
I_{at}	St. Venant torsion constant of the structural steel section
I_c	Second moment of area of the un-cracked concrete section
I_{eff}	Effective second moment of area of filler beams
I_s	Second moment of area of the steel reinforcement
I_1	Second moment of area of the effective equivalent steel section assuming that the concrete in tension is un-cracked
I_2	Second moment of area of the effective equivalent steel section neglecting concrete in tension but including reinforcement
K_e , $K_{e,II}$	Correction factors to be used in the design of composite columns
K_0	Calibration factor to be used in the design of composite columns
L	Length; span; effective span
L_e	Equivalent span
L_i	Span
$L_{A\text{-}B}$	Length of inelastic region, between points A and B, corresponding to $M_{el,Rd}$ and $M_{Ed,max}$, respectively
L_v	Length of shear connection
M	Bending moment
M_a	Contribution of the structural steel section to the design plastic resistance moment of the composite section
M_{Ed}	design bending moment
$M_{a,Ed}$	design bending moment applied to the structural steel section
$M_{b,Rd}$	Design value of the buckling resistance moment of a composite beam
$M_{c,Ed}$	is the part of the design bending moment acting on the composite section
M_{cr}	Elastic critical moment for lateral-torsional buckling of a composite beam
M_{Ed}	Design bending moment
$M_{Ed,max}$	total design bending moment applied to the steel and composite member
$M_{Ed,max,f}$	Maximum bending moment or internal force due to fatigue loading
$M_{Ed,min,f}$	Minimum bending moment due to fatigue loading
$M_{el,Rd}$	Design value of the elastic resistance moment of the composite section

$M_{f,Rd}$	Design resistance moment to 5.2.6.1 of EN1993-1-5
$M_{max,Rd}$	Maximum design value of the resistance moment in the presence of a compressive normal force
M_{perm}	Most adverse bending moment for the characteristic combination
$M_{pl,a,Rd}$	Design value of the plastic resistance moment of the structural steel section
$M_{pl,N,Rd}$	Design value of the plastic resistance moment of the composite section taking into account the compressive normal force
$M_{pl,Rd}$	Design value of the plastic resistance moment of the composite section with full shear connection
$M_{pl,y,Rd}$	Design value of the plastic resistance moment about the *y-y* axis of the composite section with full shear connection
$M_{pl,z,Rd}$	Design value of the plastic resistance moment about the *z-z* axis of the composite section with full shear connection
M_{Rd}	Design value of the resistance moment of a composite section
M_{Rk}	Characteristic value of the resistance moment of a composite section or joint
$M_{y,Ed}$	Design bending moment applied to the composite section about the *y-y* axis
$M_{z,Ed}$	Design bending moment applied to the composite section about the *z-z* axis
N	Compressive normal force; number of stress range cycles; number of shear connectors
N_a	Design value of the normal force in the structural steel section of a composite beam
N_c	Design value of the compressive normal force in the concrete flange
N_{cd}	Design compressive force in concrete slab corresponding to $M_{Ed,max}$
$N_{c,f}$	Design value of the compressive normal force in the concrete flange with full shear connection
$N_{c,el}$	Compressive normal force in the concrete flange corresponding to $M_{el,Rd}$
$N_{cr,eff}$	Elastic critical load of a composite column corresponding to an effective flexural stiffness
N_{cr}	Elastic critical normal force
N_{c1}	Design value of normal force calculated for load introduction
N_{Ed}	Design value of the compressive normal force
$N_{Ed,serv}$	Normal force of concrete tension member for SLS
$N_{Ed,ult}$	Normal force of concrete tension member for ULS
$N_{G,Ed}$	Design value of the part of the compressive normal force that is permanent
$N_{pl,a}$	Design value of the plastic resistance of the structural steel section to normal force
$N_{pl,Rd}$	Design value of the plastic resistance of the composite section to compressive normal force
$N_{pl,Rk}$	Characteristic value of the plastic resistance of the composite section to compressive normal force
$N_{pm,Rd}$	Design value of the resistance of the concrete to compressive normal force
N_R	Number of stress-range cycles
N_s	Design value of the plastic resistance of the steel reinforcement to normal force
N_{sd}	Design value of the plastic resistance of the reinforcing steel to tensile normal force
$N_{s,el}$	Tensile force in cracked concrete slab corresponding to $M_{el,Rd}$ taking into account the effects of tension stiffening
P_{Ed}	Longitudinal force on a connector at distance x from the nearest web
$P_{\ell,Rd}$	Design value of the shear resistance of a single stud connector corresponding to F_ℓ
P_{Rd}	Design value of the shear resistance of a single connector

P_{Rk}	Characteristic value of the shear resistance of a single connector
$P_{t,Rd}$	Design value of the shear resistance of a single stud connector corresponding to F_t
$V_{a,Ed}$	Design value of the shear force acting on the structural steel section
$V_{b,Rd}$	Design value of the shear buckling resistance of a steel web
$V_{c,Ed}$	Design value of the shear force acting on the reinforced concrete cross-section of a filler beam
V_{Ed}	Design value of the shear force acting on the composite section
V_L	Longitudinal shear force, acting along the steel-concrete flange interface
$V_{L,Ed}$	Longitudinal shear force acting on length $L_{A\text{-}B}$ of the inelastic region
$V_{pl,Rd}$	Design value of the plastic resistance of the composite section to vertical shear
$V_{pl,a,Rd}$	Design value of the plastic resistance of the structural steel section to vertical shear
$V_{p,Rd}$	Design value of the resistance of a composite slab to punching shear
V_{Rd}	Design value of the resistance of the composite section to vertical shear

Latin lower case letters

a	Spacing between parallel beams; diameter or width; distance
a_w	Steel flange projection outside the web of the beam
b	Width of the flange of a steel section; width of slab,half the distance between adjacent webs, or the distance between the web and the free edge of the flange
b_{eff}	Total effective width
$b_{eff,1}$	Effective width at mid-span for a span supported at both ends
$b_{eff,2}$	Effective width at an internal support
b_{ei}	Effective width of the concrete flange on each side of the web, effective width of composite bottom flange of a box section
b_f	Width of the flange of a steel section
b_i	Geometric width of the concrete flange on each side of the web
b_0	Distance between the centres of the outstand shear connectors; mean width of a concrete rib (minimum width for re-entrant sheeting profiles); width of haunch
c	Width of the outstand of a steel flange; effective perimeter of reinforcing bar
c_{st}	Concrete cover above the steel beams of filler beam decks
c_y, c_z	Thickness of concrete cover
d	Clear depth of the web of the structural steel section; diameter of the shank of a stud connector; overall diameter of circular hollow steel section; minimum transverse dimension of a column
d_{do}	Diameter of the weld collar to a stud connector
d_s	Distance between the steel reinforcement in tension to the extreme fibre of the composite slab in compression; distance between the longitudinal reinforcement in tension and the centroid of the beam's steel section
e_D	Edge distance
e_d	Either of $2e_h$ or $2e_v$
e_g	Gap between the reinforcement and the end plate in a composite column
e_h	Lateral distance from the point of application of force F_d to the relevant steel web, if F_d is applied to the concrete slab
e_v	Vertical distance from the point of application of force F_d to the plane of shear connection concerned, if F_d is applied to the steel element
f_{cd}	Design value of the cylinder compressive strength of concrete
f_{ck}	Characteristic value of the cylinder compressive strength of concrete at 28 days

f_{cm}	Mean value of the measured cylinder compressive strength of concrete
$f_{ct,eff}$	Mean value of the effective tensile strength of the concrete
f_{ctm}	Mean value of the axial tensile strength of concrete
$f_{ct,0}$	Reference strength for concrete in tension
f_{lctm}	Mean value of the axial tensile strength of lightweight concrete
f_{pd}	Limiting stress of prestressing tendons according to 3.3.3 of EN1992-1-1
f_{pk}	characteristic value of yield strength of prestressing tendons
f_{sd}	Design value of the yield strength of reinforcing steel
f_{sk}	Characteristic value of the yield strength of reinforcing steel
f_u	Specified ultimate tensile strength
f_y	Nominal value of the yield strength of structural steel
f_{yd}	Design value of the yield strength of structural steel
h	Overall depth; thickness
h_a	Depth of the structural steel section
h_c	thickness of the concrete flange;
h_n	Position of neutral axis
h_s	Depth between the centroids of the flanges of the structural steel section; distance between the longitudinal reinforcement in tension and the centre of compression
h_{sc}	Overall nominal height of a stud connector
k	Amplification factor for second-order effects; coefficient; empirical factor for design shear resistance
k_c	Coefficient
k_s	reduction factor for shear resistance of stud connector
k_ϕ	Parameter
k_1	Flexural stiffness of the cracked concrete slab
k_2	Flexural stiffness of the web
ℓ_0	Load introduction length
m	Slope of fatigue strength curve; empirical factor for design shear resistance
n	Modular ratio; number of shear connectors
n_L	Modular ratio depending on the type of loading
n_0	Modular ratio for short-term loading
n_{0G}	Modular ratio (shear moduli) for short term loading
n_{tot}	See 9.4
n_{LG}	Modular ratio (shear moduli) for long term loading
n_w	See 9.4
r	Ratio of end moments
s	Longitudinal spacing centre-to-centre of the stud shear connectors; slip
s_f	Clear distance between the upper flanges of the steel beams of filler beam decks
s_t	Transverse spacing centre-to-centre of the stud shear connectors
s_w	Spacing of webs of steel beams of filler beam decks
t	Age; thickness
t_w	Thickness of the web of the structural steel section
t_f	Thickness of the steel flange of the steel beams of filler beam decks
t_0	Age at loading
$v_{L,Ed}$	Design longitudinal shear per unit length at an interface between steel and concrete in a composite member

$v_{L,max,Ed}$	Maximum shear force per unit length of shear connection
w_k	Design value of crack width
x	Distance of a shear connector from the nearest web
x_{pl}	Distance between the plastic neutral axis and the extreme fibre of the concrete slab in compression
y	Cross-section axis parallel to the flanges
z	Cross-section axis perpendicular to the flanges; lever arm
z_0	Vertical distance

Greek upper case letters

$\Delta\sigma$	Stress range
$\Delta\sigma_c$	Reference value of the fatigue strength at 2 million cycles
$\Delta\sigma_E$	Equivalent constant amplitude stress range
$\Delta\sigma_{E,glob}$	Equivalent constant amplitude stress range due to global effects
$\Delta\sigma_{E,loc}$	Equivalent constant amplitude stress range due to local effects
$\Delta\sigma_{E,2}$	Equivalent constant amplitude stress range related to 2 million cycles
$\Delta\sigma_s$	Increase of stress in steel reinforcement due to tension stiffening of concrete
$\Delta\sigma_{s,equ}$	Damage equivalent stress range
$\Delta\tau$	Range of shear stress for fatigue loading
$\Delta\tau_c$	Reference value of the fatigue strength at 2 million cycles
$\Delta\tau_E$	Equivalent constant amplitude stress range
$\Delta\tau_{E,2}$	Equivalent constant amplitude range of shear stress related to 2 million cycles
$\Delta\tau_R$	Fatigue shear strength
Ψ	Coefficient

Greek lower case letters

α	Factor; parameter, see 6.4.2 (6)
α_{cr}	Factor by which the design loads would have to be increased to cause elastic instability
α_M	Coefficient related to bending of a composite column
$\alpha_{M,y}$, α_{Mz}	Coefficient related to bending of a composite column about the *y*-y axis and the *z*-*z* axis respectively
α_{st}	Ratio
β	Factor; transformation parameter, Half of the angle of spread of longitudinal shear force V_ℓ into the concrete slab
γ_C	Partial factor for concrete
γ_F	Partial factor for actions, also accounting for model uncertainties and dimensional variations
γ_{Ff}	Partial factor for equivalent constant amplitude stress range
γ_M	Partial factor for a material property, also accounting for model uncertainties and dimensional variations
γ_{M0}	Partial factor for structural steel applied to resistance of cross-sections, see EN 1993-1-1, 6.1(1)
γ_{M1}	Partial factor for structural steel applied to resistance of members to instability assessed by member checks, see EN 1993-1-1, 6.1(1)

γ_{Mf}	Partial factor for fatigue strength
$\gamma_{Mf,s}$	Partial factor for fatigue strength of studs in shear
γ_P	Partial factor for pre-stressing action
γ_S	Partial factor for reinforcing steel
γ_V	Partial factor for design shear resistance of a headed stud
δ	Factor; steel contribution ratio; central deflection
δ_{uk}	Characteristic value of slip capacity
ε	$\sqrt{235/f_y}$, where f_y is in N/mm^2
η_a, η_{ao}	Factors related to the confinement of concrete
η_c, η_{co}, η_{cL}	Factors related to the confinement of concrete
θ	Angle
λ, λ_v	Damage equivalent factors
$\lambda_{v,1}$	Factor to be used for the determination of the damage equivalent factor λ_v for headed studs in shear
λ_{glob}, λ_{loc}	Damage equivalent factors for global effects and local effects, respectively
$\bar{\lambda}$	Relative slenderness
$\bar{\lambda}_{LT}$	Relative slenderness for lateral-torsional buckling
μ	Coefficient of friction; nominal factor
μ_d	Factor related to design for compression and uniaxial bending
μ_{dy} , μ_{dz}	Factor μ_d related to plane of bending
ν_a	Poisson's ratio for structural steel
ρ	Parameter related to reduced design bending resistance accounting for vertical shear
ρ_s	Parameter; reinforcement ratio
$\sigma_{c,Rd}$	Local design strength of concrete
σ_{ct}	Extreme fibre tensile stress in the concrete
$\sigma_{max,f}$	Maximum stress due to fatigue loading
$\sigma_{min,f}$	Minimum stress due to fatigue loading
$\sigma_{s,max,f}$	Stress in the reinforcement due to the bending moment $M_{Ed,max,f}$
$\sigma_{s,min,f,}$	Stress in the reinforcement due to the bending moment $M_{Ed,min,f}$
σ_s	Stress in the tension reinforcement
$\sigma_{s,max}$	Stress in the reinforcement due to the bending moment M_{max}
$\sigma_{s,max,0}$	Stress in the reinforcement due to the bending moment M_{max}, neglecting concrete in tension
$\sigma_{s,0}$	Stress in the tension reinforcement neglecting tension stiffening of concrete
τ_{Rd}	Design shear strength
ϕ	Diameter (size) of a steel reinforcing bar; damage equivalent impact factor
ϕ^*	Diameter (size) of a steel reinforcing bar
φ_t	Creep coefficient
$\varphi(t,t_0)$	Creep coefficient, defining creep between times t and t_0, related to elastic deformation at 28 days
χ	Reduction factor for flexural buckling
χ_{LT}	Reduction factor for lateral-torsional buckling
ψ_L	Creep multiplier

Section 2 Basis of design

2.1 Requirements

(1)P The design of composite structures shall be in accordance with the general rules given in EN 1990.

(2)P The supplementary provisions for composite structures given in this Section shall also be applied.

(3) The basic requirements of EN 1990, Section 2 are deemed be satisfied for composite structures when the following are applied together:

- limit state design in conjunction with the partial factor method in accordance with EN 1990,
- actions in accordance with EN 1991,
- combination of actions in accordance with EN 1990 and
- resistances, durability and serviceability in accordance with this Standard.

2.2 Principles of limit states design

(1)P For composite structures, relevant stages in the sequence of construction shall be considered.

2.3 Basic variables

2.3.1 Actions and environmental influences

(1) Actions to be used in design may be obtained from the relevant parts of EN 1991.

(2)P In verification for steel sheeting as shuttering, account shall be taken of the ponding effect (increased depth of concrete due to the deflection of the sheeting).

2.3.2 Material and product properties

(1) Unless otherwise given by Eurocode 4, actions caused by time-dependent behaviour of concrete should be obtained from EN 1992-1-1.

2.3.3 Classification of actions

(1)P The effects of shrinkage and creep of concrete and non-uniform changes of temperature result in internal forces in cross sections, and curvatures and longitudinal strains in members; the effects that occur in statically determinate structures, and in statically indeterminate structures when compatibility of the deformations is not considered, shall be classified as primary effects.

(2)P In statically indeterminate structures the primary effects of shrinkage, creep and temperature are associated with additional action effects, such that the total effects are compatible; these shall be classified as secondary effects and shall be considered as indirect actions.

2.4 Verification by the partial factor method

2.4.1 Design values

2.4.1.1 Design values of actions

(1) For pre-stress by controlled imposed deformations, e.g. by jacking at supports, the partial safety factor γ_P should be specified for ultimate limit states, taking into account favourable and unfavourable effects.

NOTE: Values for γ_P may be given in the National Annex. The recommended value for both favourable and unfavourable effects is 1,0.

2.4.1.2 Design values of material or product properties

(1)P Unless an upper estimate of strength is required, partial factors shall be applied to lower characteristic or nominal strengths.

(2)P For concrete, a partial factor γ_C shall be applied. The design compressive strength shall be given by:

$$f_{cd} = f_{ck} / \gamma_C \qquad (2.1)$$

where the characteristic value f_{ck} shall be obtained by reference to EN 1992-1-1, 3.1 for normal concrete and to EN 1992-1-1, 11.3 for lightweight concrete.

NOTE: The value for γ_C is that used in EN 1992-1-1.

(3)P For steel reinforcement, a partial factor γ_S shall be applied.

NOTE: The value for γ_S is that used in EN 1992-1-1.

(4)P For structural steel, steel sheeting and steel connecting devices, partial factors γ_M shall be applied. Unless otherwise stated, the partial factor for structural steel shall be taken as γ_{M0}.

NOTE: Values for γ_M are those given in EN 1993.

(5)P For shear connection, a partial factor γ_V shall be applied.

NOTE: The value for γ_V may be given in the National Annex. The recommended value for γ_V is 1,25.

(6)P For fatigue verification of headed studs in bridges, partial factors γ_{Mf} and $\gamma_{Mf,s}$ shall be applied.

NOTE: The value for γ_{Mf} is that used in EN 1993-2. The value for $\gamma_{Mf,s}$. may be given in the National Annex. The recommended value for $\gamma_{Mf,s}$ is 1,0.

2.4.1.3 Design values of geometrical data

(1) Geometrical data for cross-sections and systems may be taken from product standards hEN or drawings for the execution and treated as nominal values.

2.4.1.4 Design resistances

(1)P For composite structures, design resistances shall be determined in accordance with EN 1990, expression (6.6a) or expression (6.6c).

2.4.2 Combination of actions

(1) The general formats for combinations of actions are given in EN 1990, Section 6.

(2) For bridges the combinations of actions are given in Annex A2 of EN 1990.

2.4.3 Verification of static equilibrium (EQU)

(1) The reliability format for the verification of static equilibrium for buildings, as described in EN 1990, Table A1.2(A), also applies to design situations equivalent to (EQU), e.g. for the design of holding down anchors or the verification of uplift of bearings of continuous beams.

Section 3 Materials

3.1 Concrete

(1) Unless otherwise given by Eurocode 4, properties should be obtained by reference to EN 1992-1-1, 3.1 for normal concrete and to EN 1992-1-1, 11.3 for lightweight concrete.

(2) This Part of EN 1994 does not cover the design of composite structures with concrete strength classes lower than C20/25 and LC20/22 and higher than C60/75 and LC60/66.

(3) Shrinkage of concrete should be determined taking account of the ambient humidity, the dimensions of the element and the composition of the concrete.

3.2 Reinforcing steel

(1) Properties should be obtained by reference to EN 1992-1-1, 3.2.

(2) For composite structures, the design value of the modulus of elasticity E_s may be taken as equal to the value for structural steel given in EN 1993-1-1, 3.2.6.

(3) Ductility characteristics should comply with EN 1992-2, 3.2.4.

3.3 Structural steel

(1) Properties should be obtained by reference to EN 1993-1-1, 3.1 and 3.2.

(2) The rules in this Part of EN 1994 apply to structural steel of nominal yield strength not more than 460 N/mm^2.

(3) Ductility characteristics should comply with EN 1993-2, 3.2.3 and 3.2.4.

3.4 Connecting devices

3.4.1 General

(1) Reference should be made to EN 1993-1-8 for requirements for fasteners and welding consumables.

3.4.2 Headed stud shear connectors

(1) Reference should be made to EN 13918.

3.5 Prestressing steel and devices

(1) Reference should be made to clauses 3.3 and 3.4 of EN1992-1-1.

3.6 Tension components in steel

(1) Reference should be made to EN 1993-1-11.

Section 4 Durability

4.1 General

(1) The relevant provisions given in EN 1990, EN 1992 and EN 1993 should be followed.

(2) Detailing of the shear connection should be in accordance with 6.6.5.

4.2 Corrosion protection at the steel-concrete interface in bridges

(1) The corrosion protection of the steel flange should extend into the steel-concrete interface at least 50 mm. For additional rules for bridges with pre-cast deck slabs, see Section 8.

Section 5 Structural analysis

5.1 Structural modelling for analysis

5.1.1 Structural modelling and basic assumptions

(1)P The structural model and basic assumptions shall be chosen in accordance with EN 1990, 5.1.1 and shall reflect the anticipated behaviour of the cross-sections, members, joints and bearings.

(2) Section 5 is applicable to composite structures in which most of the structural members and joints are either composite or of structural steel. Where the structural behaviour is essentially that of a reinforced or pre-stressed concrete structure, with only a few composite members, global analysis should be generally in accordance with EN 1992-1-1.

(3) Analysis of composite plates should be in accordance with Section 9.

5.1.2 Joint modelling

(1) The effects of the behaviour of the joints on the distribution of internal forces and moments within a structure, and on the overall deformations of the structure, may generally be neglected, but where such effects are significant (such as in the case of semi-continuous joints) they should be taken into account, see Section 8 and EN 1993-1-8.

(2) To identify whether the effects of joint behaviour on the analysis need be taken into account, a distinction may be made between three joint models as follows, see 8.2 and EN 1993-1-8, 5.1.1:

- simple, in which the joint may be assumed not to transmit bending moments;
- continuous, in which the stiffness and/or resistance of the joint allow full continuity of the members to be assumed in the analysis;
- semi-continuous, in which the behaviour of the joint needs to be taken into account in the analysis.

(3) In bridge structures semi-continuous composite joints should not be used.

5.1.3 Ground-structure interaction

(1)P Account shall be taken of the deformation characteristics of the supports where significant.

NOTE: EN 1997 gives guidance for calculation of soil-structure interaction.

(2) Where settlements have to be taken into account and where no design values have been specified, appropriate estimated values of predicted settlement should be used.

(3) Effects due to settlements may normally be neglected in ultimate limit states other than fatigue for composite members where all cross sections are in class 1 or 2 and bending resistance is not reduced by lateral torsional buckling.

5.2 Structural stability

5.2.1 Effects of deformed geometry of the structure

(1) The action effects may generally be determined using either:

- first-order analysis, using the initial geometry of the structure
- second-order analysis, taking into account the influence of the deformation of the structure.

(2)P The effects of the deformed geometry (second-order effects) shall be considered if they increase the action effects significantly or modify significantly the structural behaviour.

(3) First-order analysis may be used if the increase of the relevant internal forces or moments caused by the deformations given by first-order analysis is less than 10%. This condition may be assumed to be fulfilled if the following criterion is satisfied:

$$\alpha_{cr} \geq 10 \qquad (5.1)$$

where:

α_{cr} is the factor by which the design loading would have to be increased to cause elastic instability.

(4)P In determining the stiffness of the structure, appropriate allowances shall be made for cracking and creep of concrete and for the behaviour of the joints.

5.2.2 Methods of analysis for bridges

(1) For bridge structures EN 1993-2, 5.2.2 applies.

5.3 Imperfections

5.3.1 Basis

(1)P Appropriate allowances shall be incorporated in the structural analysis to cover the effects of imperfections, including residual stresses and geometrical imperfections such as lack of verticality, lack of straightness, lack of flatness, lack of fit and the unavoidable minor eccentricities present in joints of the unloaded structure.

(2)P The assumed shape of imperfections shall take account of the elastic buckling mode of the structure or member in the plane of buckling considered, in the most unfavourable direction and form.

5.3.2 Imperfections for bridges

(1) Suitable equivalent geometric imperfections should be used with values that reflect the possible effects of system imperfections (e.g. in bowstring arches, trusses) and also member imperfections (e.g. in composite compression members) unless these effects are included in the resistance formulae.

(2) The imperfections and design transverse forces for stabilising transverse frames should be calculated in accordance with EN 1993-2, 5.3 and 6.3.4.2, respectively.

(3) For composite columns and composite compression members, member imperfections should always be considered when verifying stability within a member's length in accordance with 6.7.3.6 or 6.7.3.7. Design values of equivalent initial bow imperfection should be taken from Table 6.5.

(4) Imperfections within steel compression members should be considered in accordance with EN 1993-2, 5.3.

5.4 Calculation of action effects

5.4.1 Methods of global analysis

5.4.1.1 General

(1) Action effects may be calculated by elastic global analysis, even where the resistance of a cross-section is based on its plastic or non-linear resistance.

(2) Elastic global analysis should be used for serviceability limit states, with appropriate corrections for non-linear effects such as cracking of concrete.

(3) Elastic global analysis should be used for verifications of the limit state of fatigue.

(4)P The effects of shear lag and of local buckling shall be taken into account if these significantly influence the global analysis.

(5) The effects of local buckling of steel elements on the choice of method of analysis may be taken into account by classifying cross-sections, see 5.5.

(6) The effects of local buckling of steel elements on stiffness may be ignored in normal composite sections. For cross-sections of Class 4, see EN 1993-1-5, 2.2.

(7) The effects on the global analysis of slip in bolt holes and similar deformations of connecting devices should be considered.

(8) Unless non-linear analysis is used, the effects of slip and separation on calculation of internal forces and moments may be neglected at interfaces between steel and concrete where shear connection is provided in accordance with 6.6.

(9) For transient design situations during erection stages uncracked global analysis and the distribution of effective width according to 5.4.1.2(4) may be used.

5.4.1.2 Effective width of flanges for shear lag

(1)P Allowance shall be made for the flexibility of steel or concrete flanges affected by shear in their plane (shear lag) either by means of rigorous analysis, or by using an effective width of flange.

(2) The effects of shear lag in steel plate elements should be considered in accordance with EN 1993-1-1, 5.2.1(5).

(3) The effective width of concrete flanges should be determined in accordance with the following provisions.

(4) When elastic global analysis is used, a constant effective width may be assumed over the whole of each span. This value may be taken as the value $b_{eff,1}$ at mid-span for a span supported at both ends, or the value $b_{eff,2}$ at the support for a cantilever.

(5) At mid-span or an internal support, the total effective width b_{eff} , see Figure 5.1, may be determined as:

$$b_{eff} = b_0 + \sum b_{ei} \tag{5.3}$$

where:

b_0 is the distance between the centres of the outstand shear connectors;

b_{ei} is the value of the effective width of the concrete flange on each side of the web and taken as $L_e/8$ (but not greater than the geometric width b_i . The value b_i should be taken as the distance from the outstand shear connector to a point mid-way between adjacent webs, measured at mid-depth of the concrete flange, except that at a free edge b_i is the distance to the free edge. The length L_e should be taken as the approximate distance between points of zero bending moment. For typical continuous composite beams, where a moment envelope from various load arrangements governs the design, and for cantilevers, L_e may be assumed to be as shown in Figure 5.1.

(6) The effective width at an end support may be determined as:

$$b_{eff} = b_0 + \sum \beta_i \, b_{ei} \tag{5.4}$$

with:

$$\beta_i = (0{,}55 + 0{,}025 \, L_e / b_{ei}) \leq 1{,}0 \tag{5.5}$$

where:

b_{ei} is the effective width, see (5), of the end span at mid-span and L_e is the equivalent span of the end span according to Figure 5.1.

(7) The distribution of the effective width between supports and midspan regions may be assumed to be as shown in Figure 5.1.

(8) The transverse distribution of stresses due to shear lag may be taken in accordance with EN 1993-1-5, 4.3 for both concrete and steel flanges.

(9) For cross-sections with bending moments resulting from the main-girder system and from a local system (for example in composite trusses with direct actions on the chord between nodes) the relevant effective widths for the main girder system and the local system should be used for the relevant bending moments.

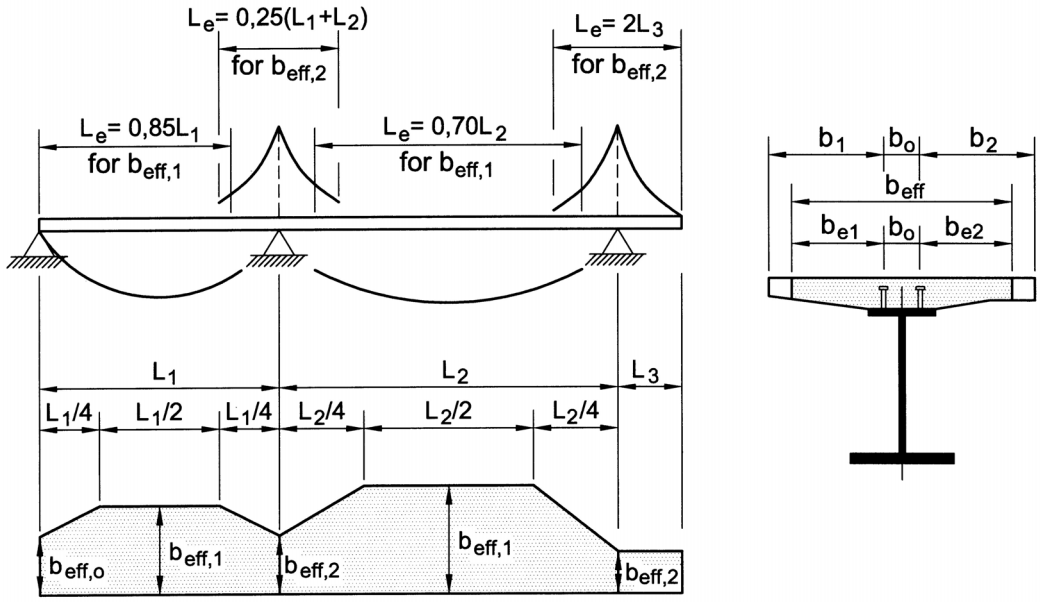

Figure 5.1 : Equivalent spans, for effective width of concrete flange

5.4.2 Linear elastic analysis

5.4.2.1 General

(1) Allowance should be made for the effects of cracking of concrete, creep and shrinkage of concrete, sequence of construction and pre-stressing.

5.4.2.2 Creep and shrinkage

(1)P Appropriate allowance shall be made for the effects of creep and shrinkage of concrete.

(2) Except for members with both flanges composite, the effects of creep may be taken into account by using modular ratios n_L for the concrete. The modular ratios depending on the type of loading (subscript L) are given by:

$$n_L = n_0 \left(1 + \psi_L \varphi_t\right) \tag{5.6}$$

where:

- n_0 is the modular ratio E_a / E_{cm} for short-term loading;
- E_{cm} is the secant modulus of elasticity of the concrete for short-term loading according to EN 1992-1-1, Table 3.1 or Table 11.3.1;
- φ_t is the creep coefficient $\varphi(t,t_0)$ according to EN 1992-1-1, 3.1.4 or 11.3.3, depending on the age (t) of concrete at the moment considered and the age (t_0) at loading;
- ψ_L is the creep multiplier depending on the type of loading, which be taken as 1,1 for permanent loads, 0,55 for primary and secondary effects of shrinkage and 1,5 for pre-stressing by imposed deformations.

(3) For permanent loads on composite structures cast in several stages one mean value t_0 may be used for the determination of the creep coefficient. This assumption may also be used for pre-stressing by imposed deformations, if the age of all of the concrete in the relevant spans at the time of pre-stressing is more than 14 days.

(4) For shrinkage, the age at loading should generally be assumed to be one day.

(5) Where prefabricated slabs are used or when pre-stressing of the concrete slab is carried out before the shear connection has become effective, the creep coefficient and the shrinkage values from the time when the composite action becomes effective should be used.

(6) Where the bending moment distribution at t_0 is significantly changed by creep, for example in continuous beams of mixed structures with both composite and non- composite spans, the time-dependent secondary effects due to creep should be considered, except in global analysis for the ultimate limit state for members where all cross-sections are in Class 1 or 2. For the time-dependent secondary effects the modular ratio may be determined with a creep multiplier ψ_L of 0,55.

(7) Appropriate account should be taken of the primary and secondary effects caused by shrinkage and creep of the concrete flange. The effects of creep and shrinkage of concrete may be neglected in analysis for verifications of ultimate limit states other than fatigue, for composite members with all cross-sections in Class 1 or 2 and in which no allowance for lateral-torsional buckling is necessary; for serviceability limit states, see Section 7.

(8) In regions where the concrete slab is assumed to be cracked, the primary effects due to shrinkage may be neglected in the calculation of secondary effects.

(9) In composite columns and compression members, account should be taken of the effects of creep in accordance with 6.7.3.4(2).

(10) For double composite action with both flanges un-cracked (e.g. in case of pre-stressing) the effects of creep and shrinkage should be determined by more accurate methods.

(11) The St. Venant torsional stiffness of box girders should be calculated for a transformed cross section in which the concrete slab thickness is reduced by the modular ratio $n_{0G} = G_a/G_c$ where G_a and G_c are the elastic shear moduli of structural steel and concrete respectively. The effects of creep should be taken into account in accordance with (2) with the modular ratio $n_{LG} = n_{0G}\,(1+\psi_L\varphi_t)$.

5.4.2.3 Effects of cracking of concrete

(1)P Appropriate allowance shall be made for the effects of cracking of concrete.

(2) The following method may be used for the determination of the effects of cracking in composite beams with concrete flanges. First the envelope of the internal forces and moments for the characteristic combinations, see EN 1990, 6.5.3, including long-term effects should be calculated using the flexural stiffness $E_a I_1$ of the un-cracked sections. This is defined as “un-cracked analysis”.

In regions where the extreme fibre tensile stress in the concrete due to the envelope of global effects exceeds twice the strength f_{ctm} or f_{lctm} , see EN1992-1-1, Table 3.1 or Table 11.3.1, the stiffness should be reduced to $E_a I_2$, see 1.5.2.12. This distribution of stiffness may be used for ultimate limit states and for serviceability limit states. A new distribution of internal forces and moments, and deformation if appropriate, is then determined by re-analysis. This is defined as “cracked analysis”.

(3) For continuous composite beams with the concrete flanges above the steel section and not pre-stressed, including beams in frames that resist horizontal forces by bracing, the following simplified method may be used. Where all the ratios of the length of adjacent continuous spans (shorter/longer) between supports are at least 0,6, the effect of cracking may be taken into account by using the flexural stiffness $E_a I_2$ over 15% of the span on each side of each internal support, and as the un-cracked values $E_a I_1$ elsewhere.

(4) The effect of cracking of concrete on the flexural stiffness of composite columns and compression members should be determined in accordance with 6.7.3.4.

(5) Unless a more precise method is used, in multiple beam decks where transverse composite members are not subjected to tensile forces, it may be assumed that the transverse members are uncracked throughout.

(6) The torsional stiffness of box girders should be calculated for a transformed cross section. In areas where the concrete slab is assumed to be cracked due to bending and where membrane shear stresses are so large that shear reinforcement is required, the calculation should be performed considering a slab thickness reduced to one half, unless the effect of cracking is considered in a more precise way.

(7) For ultimate limit states the effects of cracking on the longitudinal shear forces at the interface between the steel and concrete section should be taken into account according to 6.6.2.

(8) For serviceability limit states the longitudinal shear forces at the interface between the steel and concrete section should be calculated by uncracked analysis. If alternatively the effects of cracking are taken into account, tension stiffening and over-strength of concrete in tension should be considered.

5.4.2.4 Stages and sequence of construction

(1)P Appropriate analysis shall be made to cover the effects of staged construction including where necessary separate effects of actions applied to structural steel and to wholly or partially composite members.

(2) The effects of sequence of construction may be neglected in analysis for ultimate limit states other than fatigue, for composite members where all cross-sections are in Class 1 or 2 and in which no allowance for lateral-torsional buckling is necessary.

5.4.2.5 Temperature effects

(1) Account should be taken of effects due to temperature in accordance with EN 1991-1-5.

(2) Temperature effects may normally be neglected in analysis for the ultimate limit states other than fatigue, for composite members where all cross-sections are in Class 1 or Class 2 and in which no allowance for lateral-torsional buckling is necessary.

(3) For simplification in global analysis and for the determination of stresses for composite structures, the value of the coefficient of linear thermal expansion for structural steel may be taken as 10×10^{-6} per ^{o}C. The coefficient of thermal expansion should be taken as 12×10^{-6} per ^{o}C for calculation of change in length of the bridge.

5.4.2.6 Pre-stressing by controlled imposed deformations

(1)P Where pre-stressing by controlled imposed deformations (e.g. jacking of supports) is provided, the effects of possible deviations from the assumed values of imposed deformations and stiffness on the internal moments and forces shall be considered for analysis of ultimate and serviceability limit states.

(2) Unless a more accurate method is used to determine internal moments and forces, the characteristic values of indirect actions due to imposed deformations may be calculated with the characteristic or nominal values of properties of materials and of imposed deformation, if the imposed deformations are controlled.

5.4.2.7 Prestressing by tendons

(1) Internal forces and moments due to prestressing by bonded tendons should be determined in accordance with EN 1992-1-1, 5.10.2 taking into account the effects of creep and shrinkage of concrete and cracking of concrete where relevant.

(2) In global analysis, forces in unbonded tendons should be treated as external forces. For the determination of forces in permanently unbonded tendons, deformations of the whole structure should be taken into account.

5.4.2.8 Tension members in composite bridges

(1) This clause, *concrete tension member* means either:

(a) an isolated reinforced concrete tension member acting together with a tension member of structural steel, with shear connection only at the ends of the member, which causes a global tensile force in the concrete tension member; or

(b) the reinforced concrete part of a composite member with shear connection over the member length (*a composite tension member*) subjected to longitudinal tension.

Typical examples occur in bowstring arches and trusses where the concrete or composite members act as tension members in the main composite system.

(2)P For the determination of the internal forces in a tension member, the non-linear behaviour due to cracking of concrete and the effects of tension stiffening of concrete shall be considered for the global analyses for ultimate and serviceability limit states and for the limit state of fatigue. Account shall be taken of effects resulting from over-strength of concrete in tension.

(3) For the calculation of the internal forces of a cracked *concrete tension member* the effects of shrinkage of concrete between cracks should be taken into account. The effects of autogenous shrinkage may be neglected. For simplification and where (6) or (7) is used, the free shrinkage strain of the uncracked member should be used for the determination of secondary effects due to shrinkage.

(4) Unless a more accurate method according to (2) and (3) is used, the simplified method according to (5) may be used. Alternatively, the methods of (6) and (7) are applicable.

(5) The effects of tension stiffening of concrete may be neglected, if in the global analysis the internal forces of the *concrete tension member* are determined by uncracked analysis and the internal forces of structural steel members are determined by cracked analysis.

(6) The internal forces in bowstring arches with isolated reinforced *concrete tension members* with shear connection only at the ends of the member may be determined as follows:

- determination of the internal forces of the steel structure with an effective longitudinal stiffness $(EA_s)_{eff}$ of the cracked concrete tension member according to equation (5.6-1).

$$(E\,A_s)_{eff} = \frac{E_s\,A_s}{1-0{,}35/(1+n_o\,\rho_s)} \qquad (5.6\text{-}1)$$

  where n_o is the modular ratio for short term loading according to 5.4.2.2(2), A_s is the longitudinal reinforcement of the concrete tension member within the effective width and ρ_s is the reinforcement ratio $\rho_s = A_s/A_c$ determined with the effective concrete cross-section area A_c,

- the normal forces of the concrete tension member $N_{Ed,serv}$ for the serviceability limit state and $N_{Ed,ult}$ for the ultimate limit state are given by

$$N_{Ed,serv.} = 1.15\;A_c\;f_{ct,eff}\,(1+n_0\,\rho_s) \qquad (5.6\text{-}2)$$

$$N_{Ed,ult.} = 1.45\;A_c\;f_{ct,eff}\,(1+n_0\,\rho_s) \qquad (5.6\text{-}3)$$

  where $f_{ct,eff}$ is the effective tensile strength of concrete.

Unless verified by more accurate methods, the effective tensile strength may be assumed as $f_{ct,eff} = 0{,}7\,f_{ctm}$ where the *concrete tension member* is simultaneously acting as a deck and is subjected to combined global and local effects.

(7) For *composite tension members* subjected to normal forces and bending moments, the cross-section properties of the cracked section and the normal force of the reinforced concrete part of the composite member should be determined with the effective longitudinal stiffness of the reinforcement according to equation (5.6-1). If the normal forces of the reinforced concrete part of the member do not exceed the values given by the equations (5.6-2) and (5.6-3), these values should be used for design. Stresses in reinforcement should be determined with these forces but taken into account the actual cross-section area A_s of reinforcement.

5.4.2.9 Filler beam decks for bridges

(1) Where the detailing is in accordance with 6.3, in longitudinal bending the effects of slip between the concrete and the steel beams and effects of shear lag may be neglected. The contribution of formwork supported from the steel beams, which becomes part of the permanent construction, should be neglected.

(2) Where the distribution of loads applied after hardening of concrete is not uniform in the direction transverse to the span of the filler beams, the analysis should take account of the transverse distribution of forces due to the difference between the deformation of adjacent filler beams and of the flexural stiffness transverse to the filler beam, unless it is verified that sufficient accuracy is obtained by a simplified analysis assuming rigid behaviour in the transverse direction.

(3) Account may be taken of the effects described in (2) by using one of the following methods of analysis:

- modelling by an orthotropic slab by smearing of the steel beams,
- considering the concrete as discontinuous so as to have a plane grid with members having flexural and torsional stiffness where the torsional stiffness of the steel section may be neglected. For the determination of internal forces in the transverse direction, the flexural

and torsional stiffness of the transverse concrete members may be assumed to be 50 % of the uncracked stiffness,

- general methods according to 5.4.3.

The nominal value of Poisson's ratio of concrete may be assumed to be zero for ultimate limit states and 0.2 for serviceability limit states.

(4) Internal forces and moments should be determined by elastic analysis, neglecting redistribution of moments and internal forces due to cracking of concrete.

(5) Hogging bending moments of continuous filler beams with Class 1 cross-sections at internal supports may be redistributed for ultimate limit states other than fatigue by amounts not exceeding 15% to take into account inelastic behaviour of materials. For each load case the internal forces and moments after redistribution should be in equilibrium with the loads.

(6) Effects of creep on deformations may be taken into account according to 5.4.2.3. The effects of shrinkage of concrete may be neglected.

(7) For the determination of deflections and precamber for the serviceability limit state as well as for dynamic analysis the effective flexural stiffness of filler beams decks may be taken as

$$E_a I_{eff} = 0.5\ (E_a I_1 + E_a I_2) \qquad (5.6\text{-}4)$$

where I_1 and I_2 are the uncracked and the cracked values of second moment of area of the composite cross- subjected to sagging bending as defined in 1.5.2.11 and 1.5.2.12. The second moment of area I_2 should be determined with the effective cross-section of structural steel, reinforcement and concrete in compression. The area of concrete in compression may be determined from the plastic stress distribution.

(8) The influences of differences and gradients of temperature may be ignored, except for the determination of deflections of railway bridges without ballast bed or railway bridges with non ballasted slab track.

5.4.3 Non-linear global analysis

(1) Non-linear analysis may be used in accordance with EN 1992-1-1, 5.7 and EN 1993-1-1, 5.4.3.

(2)P The behaviour of the shear connection shall be taken into account.

(3)P Effects of the deformed geometry of the structure should be taken into account in accordance with 5.2.

5.4.4 Combination of global and local action effects

(1) Global and local action effects should be added taking into account a combination factor.

NOTE: The combination factor may be given in an National Annex. The recommended values are given in Annex E of EN 1993-2.

5.5 Classification of cross-sections

5.5.1 General

(1)P The classification system defined in EN 1993-1-1, 5.5.2 applies to cross-sections of composite beams.

(2) A composite section should be classified according to the least favourable class of its steel elements in compression. The class of a composite section normally depends on the direction of the bending moment at that section.

(3) A steel compression element restrained by attaching it to a reinforced concrete element may be placed in a more favourable class, provided that the resulting improvement in performance has been established.

(4) For classification, the plastic stress distribution should be used except at the boundary between Classes 3 and 4, where the elastic stress distribution should be used taking into account sequence of construction and the effects of creep and shrinkage. For classification, design values of strengths of materials should be used. Concrete in tension should be neglected. The distribution of the stresses should be determined for the gross cross-section of the steel web and the effective flanges.

(5) For cross-sections in Class 1 and 2 with bars in tension, reinforcement used within the effective width should have a ductility Class B or C, see EN 1992-1-1, Table C.1. Additionally for a section whose resistance moment is determined by 6.2.1.2, 6.2.1.3 or 6.2.1.4, a minimum area of reinforcement A_s within the effective width of the concrete flange should be provided to satisfy the following condition:

$$A_s \geq \rho_s A_c \tag{5.7}$$

with

$$\rho_s = \delta \frac{f_y}{235} \frac{f_{ctm}}{f_{sk}} \sqrt{k_c} \tag{5.8}$$

where:

A_c is the effective area of the concrete flange;

f_y is the nominal value of the yield strength of the structural steel in N/mm^2;

f_{sk} is the characteristic yield strength of the reinforcement;

f_{ctm} is the mean tensile strength of the concrete, see EN1992-1-1, Table 3.1 or Table 11.3.1;

k_c is a coefficient given in 7.4.2;

δ is equal to 1.0 for Class 2 cross-sections , and equal to 1,1 for Class 1 cross-sections at which plastic hinge rotation is required.

(6) Welded mesh should not be included in the effective section unless it has been shown to have sufficient ductility, when built into a concrete slab, to ensure that it will not fracture.

(7) In global analysis for stages in construction, account should be taken of the class of the steel section at the stage considered.

5.5.2 Classification of composite sections without concrete encasement

(1) A steel compression flange that is restrained from buckling by effective attachment to a concrete flange by shear connectors may be assumed to be in Class 1 if the spacing of connectors is in accordance with 6.6.5.5.

(2) The classification of other steel flanges and webs in compression in composite beams without concrete encasement should be in accordance with EN 1993-1-1, Table 5.2. An element that fails to satisfy the limits for Class 3 should be taken as Class 4.

(3) Cross-sections with webs in Class 3 and flanges in Classes 1 or 2 may be treated as an effective cross-section in Class 2 with an effective web in accordance with EN1993-1-1, 6.2.2.4.

5.5.3 Classification of sections of filler beam decks for bridges

(1) A steel outstand flange of a composite section should be classified in accordance with table 5.2.

(2) A web in Class 3 that is encased in concrete may be represented by an effective web of the same cross-section in Class 2.

Table 5.2: Maximum values c/t for steel flanges of filler beams

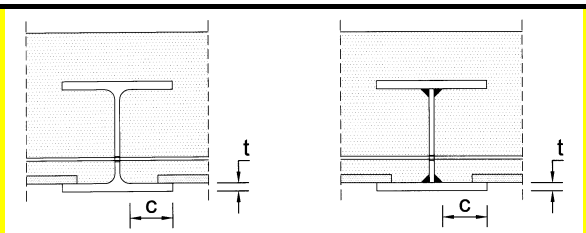

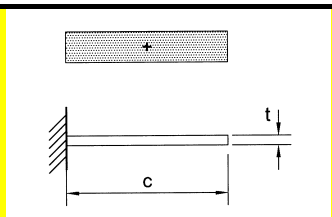

Stress distribution
(compression positive)

Class	Type	Limit max (c/t)	
1	Rolled or welded	c/t $\leq 9\varepsilon$	$\varepsilon = \sqrt{\frac{235}{f_y}}$ with f_y in N/mm^2
2		c/t $\leq 14\varepsilon$	
3		c/t $\leq 20\varepsilon$	

Section 6 Ultimate limit states

6.1 Beams

6.1.1 Beams in bridges - general

(1) Composite beams should be checked for:

- resistance of cross-sections (see 6.2 and 6.3)
- resistance to lateral-torsional buckling (see 6.4)
- resistance to shear buckling and in-plane forces applied to webs (see 6.2.2 and 6.5)
- resistance to longitudinal shear (see 6.6)
- resistance to fatigue (see 6.8).

6.1.2 Effective width for verification of cross-sections

(1) The effective width of the concrete flange for verification of cross-sections should be determined in accordance with 5.4.1.2 taking into account the distribution of effective width between supports and mid-span regions.

6.2 Resistances of cross-sections of beams

6.2.1 Bending resistance

6.2.1.1 General

(1)P The design bending resistance shall be determined by rigid-plastic theory only where the effective composite cross-section is in Class 1 or Class 2 and where pre-stressing by tendons is not used.

(2) Elastic analysis and non-linear theory for bending resistance may be applied to cross-sections of any class.

(3) For elastic analysis and non-linear theory it may be assumed that the composite cross-section remains plane if the shear connection and the transverse reinforcement are designed in accordance with 6.6, considering appropriate distributions of design longitudinal shear force.

(4)P The tensile strength of concrete shall be neglected.

(5) Where the steel section of a composite member is curved in plan, the effects of curvature should be taken into account.

6.2.1.2 Plastic resistance moment $M_{pl,Rd}$ of a composite cross-section

(1) The following assumptions should be made in the calculation of $M_{pl,Rd}$:

a) there is full interaction between structural steel, reinforcement, and concrete;

b) the effective area of the structural steel member is stressed to its design yield strength f_{yd} in tension or compression;

c) the effective areas of longitudinal reinforcement in tension and in compression are stressed to their design yield strength f_{sd} in tension or compression. Alternatively, reinforcement in compression in a concrete slab may be neglected;

d) the effective area of concrete in compression resists a stress of 0.85 f_{cd}, constant over the whole depth between the plastic neutral axis and the most compressed fibre of the concrete, where f_{cd} is the design cylinder compressive strength of concrete.

Typical plastic stress distributions are shown in Figure 6.2.

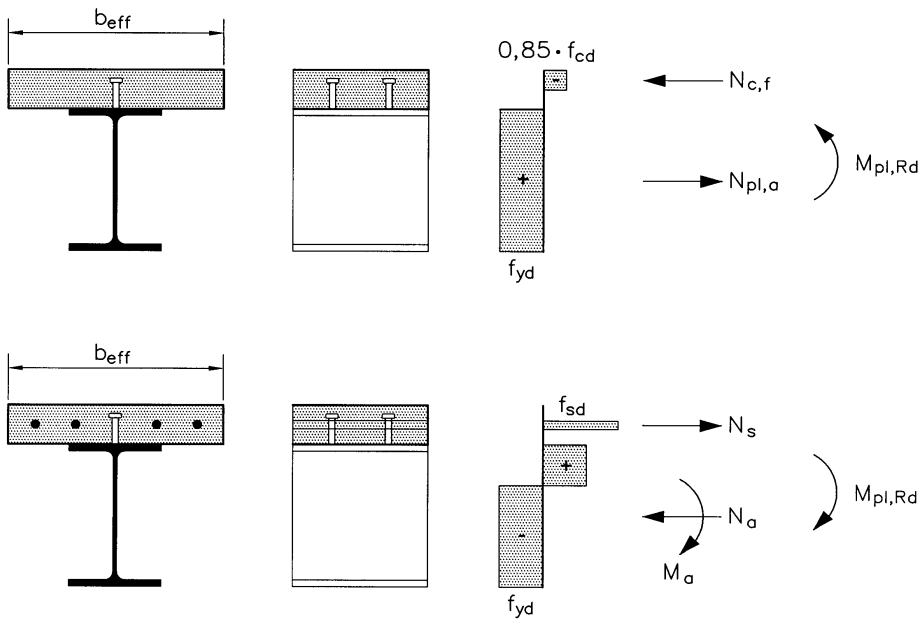

Figure 6.2 : Examples of plastic stress distributions for a composite beam with a solid slab and full shear connection in sagging and hogging bending

(2) For composite cross-sections with structural steel grade S420 or S460, where the distance x_{pl} between the plastic neutral axis and the extreme fibre of the concrete slab in compression exceeds 15% of the overall depth h of the member, the design resistance moment M_{Rd} should be taken as β $M_{pl,Rd}$ where β is the reduction factor given in Figure 6.3. For values of x_{pl} / h greater than 0.4 the resistance to bending should be determined from 6.2.1.4 or 6.2.1.5.

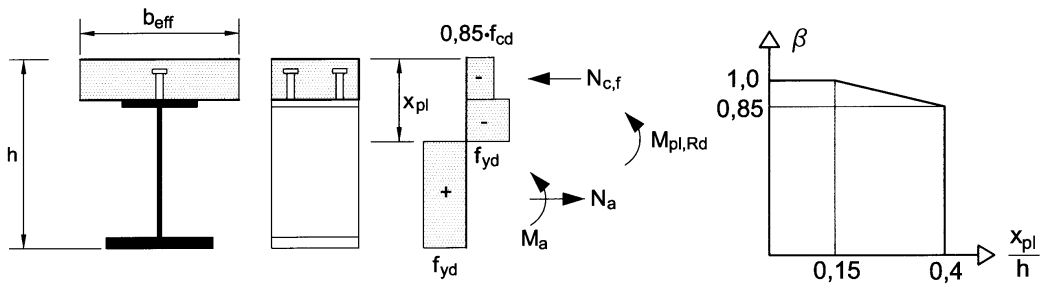

Figure 6.3: Reduction factor β for $M_{pl,Rd}$

(3) Where plastic theory is used and reinforcement is in tension, that reinforcement should be in accordance with 5.5.1(5).

6.2.1.3 Additional rules for beams in bridges

(1) Where a composite beam is subjected to biaxial bending, combined bending and torsion, or combined global and local effects, account should be taken of EN 1993-1-1, 6.2.

(2) Where elastic global analysis is used for a continuous beam, M_{Ed} should not exceed 0.9 $M_{pl,Rd}$ at any cross-section in Class 1 or 2 in sagging bending with the concrete slab in compression where both:

- the cross-section in hogging bending at or near an adjacent support is in Class 3 or 4, and
- the ratio of lengths of the spans adjacent to that support (shorter/longer) is less than 0.6.

Alternatively, a global analysis that takes account of inelastic behaviour should be used.

6.2.1.4 Non-linear resistance to bending

(1)P Where the bending resistance of a composite cross-section is determined by non-linear theory, the stress-strain relationships of the materials shall be taken into account.

(2) It should be assumed that the composite cross-section remains plane and that the strain in bonded reinforcement, whether in tension or compression, is the same as the mean strain in the surrounding concrete.

(3) The stresses in the concrete in compression should be derived from the stress-strain curves given in EN 1992-1-1, 3.1.7.

(4) The stresses in the reinforcement should be derived from the bi-linear diagrams given in EN 1992-1-1, 3.2.7.

(5) The stresses in structural steel in compression or tension should be derived from the bi-linear diagram given in EN 1993-1-1, 5.4.3(4) and should take account of the effects of the method of construction (e.g. propped or un-propped).

(6) For Class 1 and Class 2 composite cross-sections with the concrete flange in compression, the non-linear resistance to bending M_{Rd} may be determined as a function of the compressive force in the concrete N_c using the simplified expressions (6.2) and (6.3), as shown in Figure 6.6:

$$M_{Rd} = M_{a,Ed} + (M_{el,Rd} - M_{a,Ed})\frac{N_c}{N_{c,el}} \qquad \text{for } N_c \le N_{c,el} \tag{6.2}$$

$$M_{Rd} = M_{el,Rd} + (M_{pl,Rd} - M_{el,Rd})\frac{N_c - N_{c,el}}{N_{c,f} - N_{c,el}} \qquad \text{for } N_{c,el} \le N_c \le N_{c,f} \tag{6.3}$$

with:

$$M_{el,Rd} = M_{a,Ed} + k\, M_{c,Ed} \tag{6.4}$$

where:

$M_{a,Ed}$ is the design bending moment applied to structural steel section before composite behaviour;

$M_{c,Ed}$ is the part of the design bending moment acting on the composite section;

k is the lowest factor such that a stress limit in 6.2.1.5(2) is reached; where un-propped construction is used, the sequence of construction should be taken into account;

$N_{c,el}$ is the compressive force in the concrete flange corresponding to moment $M_{el,Rd}$.

For cross sections where 6.2.1.2 (2) applies, in expression (6.3) and in Figure 6.6 instead of $M_{pl,Rd}$ the reduced value $\beta M_{pl,Rd}$ should be used.

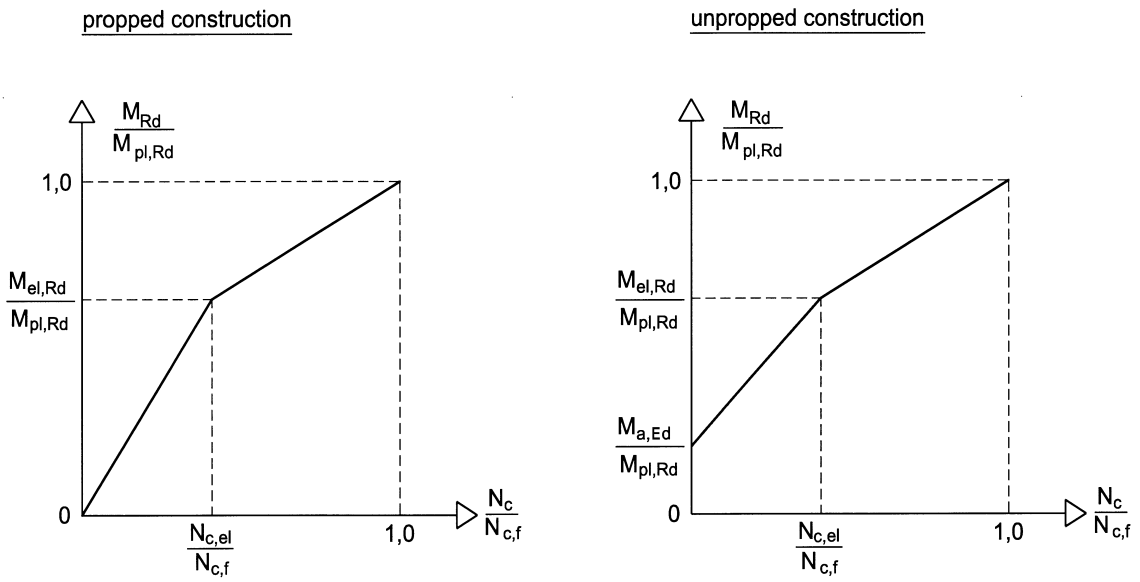

Figure 6.6 : Simplified relationship between M_{Rd} and N_c for sections with the concrete slab in compression

(7) Where the bending resistance of a composite cross-section is determined by non-linear theory, the stresses in prestressing steel should be derived from the design curves in of EN 1992-1-1, 3.3.6. The design initial pre-strain in prestressing tendons should be taken into account when assessing the stresses in the tendons.

6.2.1.5 Elastic resistance to bending

(1) Stresses should be calculated by elastic theory, using an effective width of the concrete flange in accordance with 6.1.2. For cross-sections in Class 4, the effective structural steel section should be determined in accordance with EN 1993-1-5, 4.3.

(2) In the calculation of the elastic resistance to bending based on the effective cross-section, the limiting stresses should be taken as:

- f_{cd} in concrete in compression;
- f_{yd} in structural steel in tension or compression;
- f_{sd} in reinforcement in tension or compression. Alternatively, reinforcement in compression in a concrete slab may be neglected.

(3)P Stresses due to actions on the structural steelwork alone shall be added to stresses due to actions on the composite member.

(4) Unless a more precise method is used, the effect of creep should be taken into account by use of a modular ratio according to 5.4.2.2.

(5) In cross-sections with concrete in tension and assumed to be cracked, the stresses due to primary (isostatic) effects of shrinkage may be neglected.

(6) Compression flanges should be checked for lateral torsional buckling in accordance with 6.4.

(7) For composite bridges with cross-sections in Class 4 designed according to EN 1993-1-5, Section 4, the sum of stresses from different stages of construction and use, calculated on gross sections, should be used for calculating the effective steel cross-section at the time considered. These effective cross-sections should be used for checking stresses in the composite section at the different stages of construction and use.

(8) In the calculation of the elastic resistance to bending based on the effective cross-section, the limiting stress in prestressing tendons should be taken as f_{pd} according to EN 1992-1-1, 3.3.6. The stress due to initial prestrain in prestressing tendons should be taken into account in accordance with of EN 1992-1-1, 5.10.8.

(9) As an alternative to (7) and (8), Section 10 of EN 1993-1-5 may be used.

NOTE: The National Annex may give a choice of the methods given in (7) and (8) and Section 10 of EN 1993-1-5.

6.2.2 Resistance to vertical shear

6.2.2.1 Scope

(1) Clause 6.2.2 applies to composite beams with a rolled or welded structural steel section with a solid web, which may be stiffened.

6.2.2.2 Plastic resistance to vertical shear

(1) The resistance to vertical shear $V_{pl,Rd}$ should be taken as the resistance of the structural steel section $V_{pl,a,Rd}$ unless the value for a contribution from the reinforced concrete part of the beam has been established.

(2) The design plastic shear resistance $V_{pl,a,Rd}$ of the structural steel section should be determined in accordance with EN 1993-1-1, 6.2.6.

6.2.2.3 Shear buckling resistance

(1) The shear buckling resistance $V_{b,Rd}$ of an uncased steel web should be determined in accordance with EN 1993-1-5, 5.

(2) No account should be taken of a contribution from the concrete slab, unless a more precise method than the one of EN 1993-1-5, 5 is used and unless the shear connection is designed for the relevant vertical force.

6.2.2.4 Bending and vertical shear

(1) Where the vertical shear force V_{Ed} exceeds half the shear resistance V_{Rd} given by $V_{pl,Rd}$ in 6.2.2.2 or $V_{b,Rd}$ in 6.2.2.3, whichever is the smaller, allowance should be made for its effect on the resistance moment.

(2) For cross-sections in Class 1 or 2, the influence of the vertical shear on the resistance to bending may be taken into account by a reduced design steel strength $(1 - \rho) f_{yd}$ in the shear area as shown in Figure 6.7 where:

$$\rho = (2V_{Ed} / V_{Rd} - 1)^2 \qquad (6.5)$$

and V_{Rd} is the appropriate resistance to vertical shear, determined in accordance with 6.2.2.2 or 6.2.2.3.

(3) For cross-sections in Class 3 and 4, EN 1993-1-5, 7.1 is applicable using the calculated stresses of the composite section.

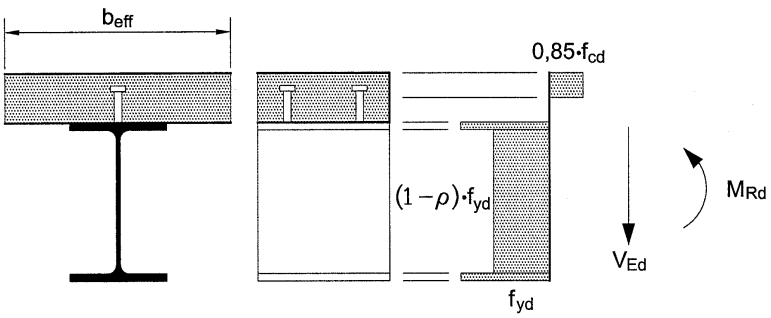

Figure 6.7 : Plastic stress distribution modified by the effect of vertical shear

6.2.2.5 Additional rules for beams in bridges

(1) When applying EN 1993-1-5, 5.4(1) for a beam with one flange composite, the dimension of the non-composite flange may be used even if that is the larger steel flange. The axial normal force N_{Ed} in EN 1993-1-5, 5.4(2) should be taken as the axial force acting on the composite section.

(2) For the calculation of $M_{f,Rd}$ in EN 1993-1-5, 7.1(1) the design plastic resistance to bending of the effective composite section excluding the steel web should be used.

(3) For vertical shear in a concrete flange of a composite member, EN 1992-2, 6.2.2 applies.

NOTE: For concrete flanges in tension the values of k_1 in EN 1992-1-1, 6.2.2, equations (6.2a and 6.2b) may be given in a National Annex. The value for k_1 should take into account specific aspects of composite action.

6.3 Filler beam decks

6.3.1 Scope

(1) Clauses 6.3.1 to 6.3.5 are applicable to decks defined in 1.5.2.14. A typical cross-section of a filler beam deck with non-participating permanent formwork is shown in Figure 6.8. No application rules are given for fully encased beams.

NOTE: The National Annex may give a reference to rules for transverse filler beams

(2) Steel beams may be rolled sections, or welded sections with a uniform cross-section. For welded sections, both the width of the flanges and the depth of the web should be within the ranges that are available for rolled H- or I- sections.

(3) Spans may be simply supported or continuous. Supports may be square or skew.

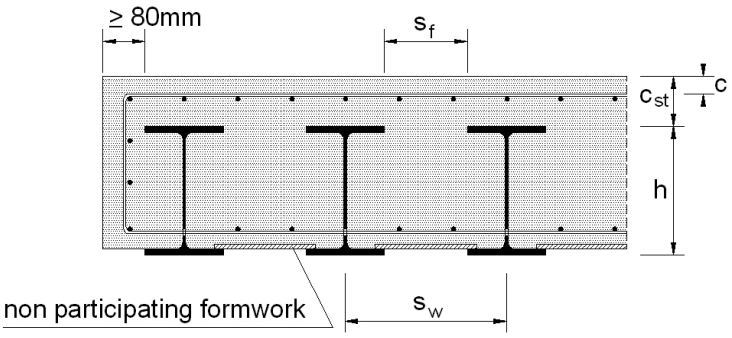

Figure 6.8 : Typical cross-section of a filler beam deck

(4) Filler-beam decks should comply with the following:

- the steel beams are not curved in plan;
- the skew angle θ should not be greater than 30° (the value θ = 0 corresponding to a non-skew deck) ;
- the nominal depth h of the steel beams complies with: 210 mm ≤ h ≤ 1100 mm;
- the spacing s_w of webs of the steel beams should not exceed the lesser of $h/3$ + 600 mm and 750 mm, where h is the nominal depth of the steel beams in mm ;
- the concrete cover c_{st} above the steel beams satisfies the conditions:

  $c_{st} \geq 70$ mm, $c_{st} \leq 150$ mm, $c_{st} \leq h/3$, $c_{st} \leq x_{pl} - t_f$

  where x_{pl} is the distance between the plastic neutral axis for sagging bending and the extreme fibre of the concrete in compression, and t_f is the thickness of the steel flange;
- the concrete cover to the side of an encased steel flange is not less than 80 mm;
- the clear distance s_f between the upper flanges of the steel beams is not less than 150 mm, so as to allow pouring and compaction of concrete;

- the soffit of the lower flange of the steel beams is not encased ;
- a bottom layer of transverse reinforcement passes through the webs of the steel beams, and is anchored beyond the end steel beams, and at each end of each bar, so as to develop its yield strength in accordance with 8.4 of EN 1992-1; ribbed bars in accordance with EN 1992-1-1, 3.2.2 and Annex C are used; their diameter is not less than 16 mm and their spacing is not more than 300 mm ;
- normal-density concrete is used;
- the surface of the steel beams should be descaled. The soffit, the upper surfaces and the edges of the lower flange of the steel beams should be protected against corrosion;
- for road and railway bridges the holes in the webs of the steel section should be drilled.

6.3.2 General

(1) Filler beam decks should be designed for ultimate limit states according to 6.3.2 to 6.3.5 and for the serviceability limit state according to Section 7.

(2) Steel beams with bolted connections and/or welding should be checked against fatigue.

(3) Composite cross-sections should be classified according to 5.5.3.

(4) Mechanical shear connection need not be provided.

6.3.3 Bending moments

(1) The design resistance of composite cross-sections to bending moments should be determined according to 6.2.1.

(2) The design resistance of reinforced concrete sections to transverse bending moments should be determined according to EN 1992-1-1.

6.3.4 Vertical shear

(1) The resistance of the composite cross-section to vertical shear should be taken as the resistance of the structural steel section $V_{pl,a,Rd}$ unless the value of a contribution from the reinforced concrete part has been established in accordance with EN 1992-1-1.

(2) Unless a more accurate analysis is used, the part $V_{c,Ed}$ of the total vertical shear V_{Ed} acting on the reinforced concrete part may be taken as $V_{c,Ed} = V_{Ed}\ (M_{s,Rd}/M_{pl,Rd})$, with $M_{s,Rd} = N_s\ z_s = A_s\ f_{sd}\ z_s$. The lever arm z_s is shown in Figure 6.9 for a filler-beam deck in Class 1 or 2.

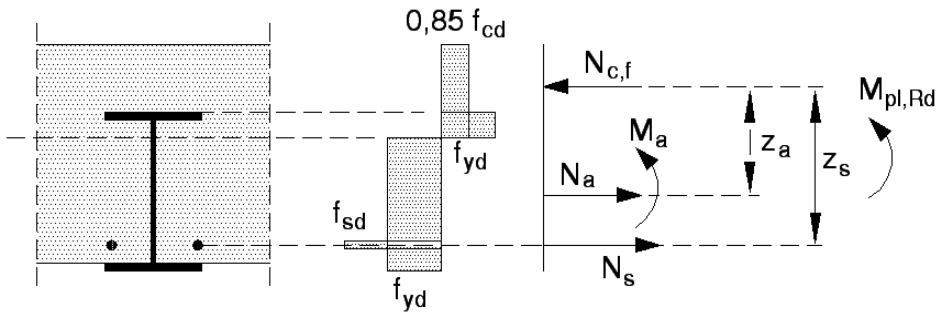

Figure 6.9: Stress distribution at M_{Rd} for part of a filler-beam deck in Class 1 or 2

(3) The design resistance to vertical shear of reinforced concrete sections between filler beams should be verified according to EN 1992.

6.3.5 Resistance and stability of steel beams during execution

(1) Steel beams before the hardening of concrete should be verified according to EN 1993-1-1 and EN 1993-2.

6.4 Lateral-torsional buckling of composite beams

6.4.1 General

(1) A steel flange that is attached to a concrete or composite slab by shear connection in accordance with 6.6 may be assumed to be laterally stable, provided that lateral instability of the concrete slab is prevented.

(2) All other steel flanges in compression should be checked for lateral stability.

(3) The methods in EN 1993-1-1, 6.3.2.1-6.3.2.3 and, more generally, 6.3.4 are applicable to the steel section on the basis of the cross-sectional forces on the composite section, taking into account effects of sequence of construction in accordance with 5.4.2.4. The lateral and elastic torsional restraint at the level of the shear connection to the concrete slab may be taken into account.

6.4.2 Beams in bridges with uniform cross-sections in Class 1, 2 or 3

(1) For beams with a uniform steel cross-section in Class 1, 2, or 3, restrained in accordance with 6.4.2(5), the design buckling resistance moment should be taken as:

$$M_{b,Rd} = \chi_{LT}\ M_{Rd} \tag{6.6}$$

where :

χ_{LT} is the reduction factor for lateral-torsional buckling depending on the relative slenderness $\bar{\lambda}_{LT}$, and

M_{Rd} is the design resistance moment at the relevant cross-section.

Values of the reduction factor χ_{LT} may be obtained from EN 1993-1-1, 6.3.2.

(2) For cross-sections in Class 1 or 2, $M_{Rd} = M_{pl,Rd}$, determined according to 6.2.1.2.

(3) For cross-sections in Class 3, M_{Rd} should be taken as $M_{el,Rd}$ given by expression (6.4), but as the design bending moment that causes either a tensile stress f_{sd} in the reinforcement or a stress f_{yd} in an extreme fibre of the steel section, whichever is the smaller.

(4) The relative slenderness $\bar{\lambda}_{LT}$ may be calculated from :

$$\bar{\lambda}_{LT} = \sqrt{\frac{M_{Rk}}{M_{cr}}} \tag{6.7}$$

where:

M_{Rk} is the resistance moment of the composite section using the characteristic material properties and the method specified for M_{Rd};

M_{cr} is the elastic critical moment for lateral-torsional buckling determined at the relevant cross-section.

(5) Where the slab is attached to one or more supporting steel members which are approximately parallel to the composite beam considered and the conditions (a) and (b) below are satisfied, the calculation of the elastic critical moment, M_{cr}, may be based on the "continuous inverted-U frame" model. This model takes into account the lateral displacement of the bottom flange causing bending of the steel web, and the rotation of the top flange as shown in Figure 6.10.

a) The top flange of the steel member is attached to a reinforced concrete slab by shear connectors in accordance with 6.6.

b) At each support of the steel member, the bottom flange is laterally restrained and the web is stiffened. Elsewhere, the web is un-stiffened.

(6) At the level of the top steel flange, a rotational stiffness k_s per unit length of steel beam may be adopted to represent the U-frame model by a beam alone:

$$k_s = \frac{k_1 k_2}{k_1 + k_2} \tag{6.8}$$

where:

k_1 is the flexural stiffness of the cracked concrete slab in the direction transverse to the steel beam, which may be taken as:

$$k_1 = \alpha\, E_a\, I_2 / a \tag{6.9}$$

where $\alpha = 2$ for k_1 for an edge beam, with or without a cantilever, and $\alpha = 3$ for an inner beam. For inner beams in a bridge deck with four or more similar beams, $\alpha = 4$ may be used.

a is the spacing between the parallel beams;

$E_a I_2$ is the "cracked" flexural stiffness per unit width of the concrete or composite slab, as defined in 1.5.2.12, where I_2 should be taken as the lowest of the value at midspan, for sagging bending, and the values at the supporting steel members, for hogging bending;

k_2 is the flexural stiffness of the steel web, to be taken as:

$$k_2 = \frac{E_a t_w^3}{4(1 - \nu_a^2) h_s} \tag{6.10}$$

where ν_a is Poisson's ratio for steel and h_s and t_w are defined in Figure 6.10.

(7) In the U-frame model, the favourable effect of the St. Venant torsional stiffness, $G_a I_{at}$, of the steel section may be taken into account for the calculation of M_{cr}.

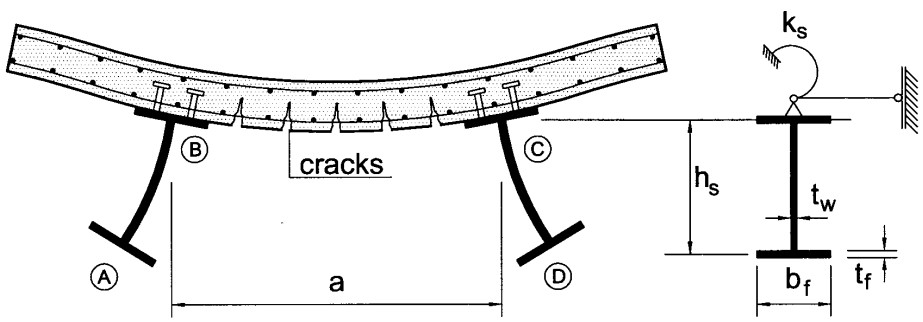

Figure 6.10 :U-frame model

6.4.3 General methods for buckling of members and frames

6.4.3.1 General method

(1) For composite members outside the scope of 6.7 and for composite frames EN 1993-1-1, 6.3.4 is applicable. For the determination of α_{ult} and α_{crit}, appropriate resistances and stiffnesses of concrete and composite members should be used, in accordance with EN 1992 and EN 1994.

6.4.3.2 Simplified method

(1) Clause 6.3.4.2 and Annex D2.4 of EN 1993-2 are applicable to structural steel flanges of composite beams and chords of composite trusses. Where restraint is provided by concrete or composite members, appropriate elastic stiffnesses should be used, in accordance with EN 1992 and EN 1994.

6.5 Transverse forces on webs

6.5.1 General

(1) The rules given in EN 1993-1-5, 6 to determine the design resistance of an unstiffened or stiffened web to transverse forces applied through a flange are applicable to the non-composite steel flange of a composite beam, and to the adjacent part of the web.

(2) If the transverse force acts in combination with bending and axial force, the resistance should be verified according to EN 1993-1-5, 7.2.

6.5.2 Flange-induced buckling of webs

(1) EN 1993-1-5, 8 is applicable provided that area A_{fc} is taken equal to the area of the non-composite steel flange or the transformed area of the composite steel flange taking into account the modular ratio for short-term loading, whichever is the smaller.

6.6 Shear connection

6.6.1 General

6.6.1.1 Basis of design

(1) Clause 6.6 is applicable to composite beams and, as appropriate, to other types of composite member.

(2)P Shear connection and transverse reinforcement shall be provided to transmit the longitudinal shear force between the concrete and the structural steel element, ignoring the effect of natural bond between the two.

(3)P Shear connectors shall have sufficient deformation capacity to justify any inelastic redistribution of shear assumed in design.

(4)P Ductile connectors are those with sufficient deformation capacity to justify the assumption of ideal plastic behaviour of the shear connection in the structure considered.

(5) A connector may be taken as ductile if the characteristic slip capacity δ_{uk} is at least 6mm.

NOTE: An evaluation of δ_{uk} is given in Annex B.

(6)P Where two or more different types of shear connection are used within the same span of a beam, account shall be taken of any significant difference in their load-slip properties.

(7)P Shear connectors shall be capable of preventing separation of the concrete element from the steel element, except where separation is prevented by other means.

(8) To prevent separation of the slab, shear connectors should be designed to resist a nominal ultimate tensile force, perpendicular to the plane of the steel flange, of at least 0.1 times the design ultimate shear resistance of the connectors. If necessary they should be supplemented by anchoring devices.

(9) Headed stud shear connectors in accordance with 6.6.5.7 may be assumed to provide sufficient resistance to uplift, unless the shear connection is subjected to direct tension.

(10)P Longitudinal shear failure and splitting of the concrete slab due to concentrated forces applied by the connectors shall be prevented.

(11) If the detailing of the shear connection is in accordance with the appropriate provisions of 6.6.5 and the transverse reinforcement is in accordance with 6.6.6, compliance with 6.6.1.1(10) may be assumed.

(12) Where a method of interconnection, other than the shear connectors included in 6.6, is used to transfer shear between a steel element and a concrete element, the behaviour assumed in design should be based on tests and supported by a conceptual model. The design of the composite member should conform to the design of a similar member employing shear connectors included in 6.6, in so far as practicable.

(13) Adjacent to cross frames and vertical web stiffeners, and for composite box girders, the effects should be considered of bending moments at the steel-concrete interface, about an axis parallel to the axis of the steel beam, caused by deformations of the slab or the steel member.

NOTE: reference to further guidance may be given in the National Annex.

6.6.1.2 Ultimate limit states other than fatigue

For verifications for ultimate limit states, the size and spacing of shear connectors may be kept constant over any length where the design longitudinal shear per unit length does not exceed the longitudinal design shear resistance by more than 10%. Over every such length, the total design longitudinal shear force should not exceed the total design shear resistance.

6.6.2 Longitudinal shear force in beams for bridges

6.6.2.1 Beams in which elastic or non-linear theory is used for resistances of cross-sections

(1) For any load combination and arrangement of design actions, the longitudinal shear per unit length at the interface between steel and concrete in a composite member, $v_{L,Ed}$, should be determined from the rate of change of the longitudinal force in either the steel or the concrete element of the composite section. Where elastic theory is used for calculating resistances of sections, the envelope of transverse shear force in the relevant direction may be used.

(2) In general the elastic properties of the uncracked section should be used for the determination of the longitudinal shear force, even where cracking of concrete is assumed in global analysis. The effects of cracking of concrete on the longitudinal shear force may be taken into account, if in global analysis and for the determination of the longitudinal shear force account is taken of the effects of tension stiffening and possible over-strength of concrete.

(3) Where concentrated longitudinal shear forces occur, account should be taken of the local effects of longitudinal slip; for example, as provided in 6.6.2.3 and 6.6.2.4. Otherwise, the effects of longitudinal slip may be neglected.

(4) For composite box girders, the longitudinal shear force on the connectors should include the effects of bending and torsion, and also of distortion according to 6.2.7 of EN 1993-2, if appropriate. For box girders with a flange designed as a composite plate, see 9.4.

6.6.2.2 Beams in bridges with cross-sections in Class 1 or 2

(1) In members with cross-sections in Class 1 or 2, if the total design bending moment $M_{Ed,max} = M_{a,Ed} + M_{c,Ed}$ exceeds the elastic bending resistance $M_{el,Rd}$, account should be taken of the non-linear relationship between transverse shear and longitudinal shear within the inelastic lengths of the member. $M_{a,Ed}$ and $M_{c,Ed}$ are defined in 6.2.1.4 (6).

(2) This paragraph applies to regions where the concrete slab is in compression, as shown in Figure 6.11. Shear connectors should be provided within the inelastic length $L_{A\text{-}B}$ to resist the longitudinal shear force $V_{L,Ed}$, resulting from the difference between the normal forces N_{cd} and $N_{c,el}$ in the concrete slab at the cross-sections B and A, respectively. The bending resistance $M_{el,Rd}$ at section A is defined in 6.2.1.4. If the maximum bending moment $M_{Ed,max}$ at section B is smaller than the plastic bending resistance $M_{pl,Rd}$, the normal force N_{cd} at section B may be determined according to 6.2.1.4(6) and Figure 6.6, or alternatively using the simplified linear relationship according to Figure 6.11.

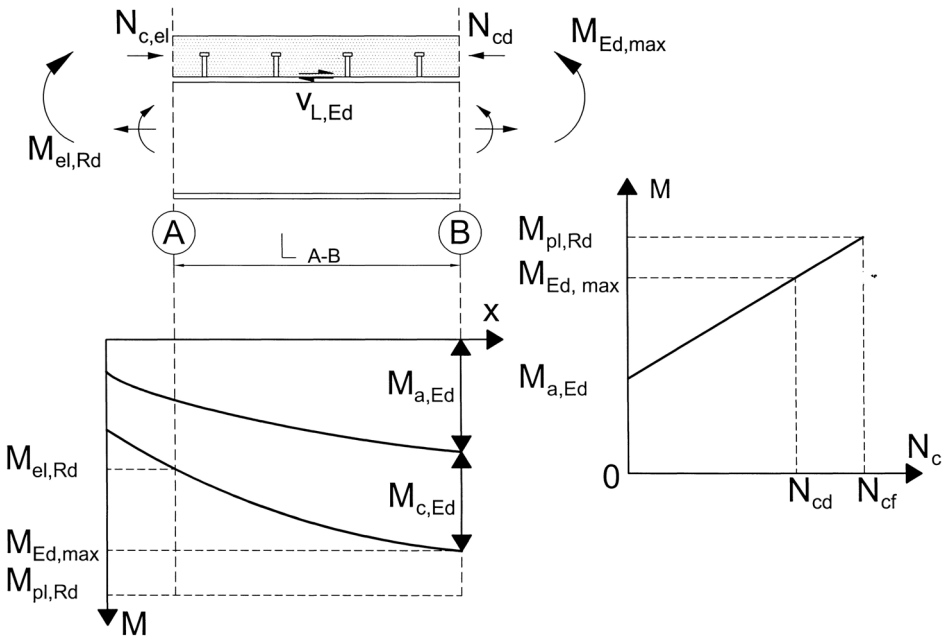

Figure 6.11: Determination of longitudinal shear in beams with inelastic behaviour of cross sections

(3) Where the effects of inelastic behaviour of a cross-section with the concrete slabs in tension are taken into account, the longitudinal shear forces and their distribution should be determined from the differences of forces in the reinforced concrete slab within the inelastic length of the beam, taking into account effects from tension stiffening of concrete between cracks and possible over-strength of concrete in tension. For the determination of $M_{el,Rd}$ 6.2.1.4(7) and 6.2.1.5 applies.

(4) Unless the method according to (3) is used, the longitudinal shear forces should be determined by elastic analysis with the cross-section properties of the uncracked section taking into account effects of sequence of construction.

6.6.2.3 Local effects of concentrated longitudinal shear force due to load introduction of longitudinal forces

(1) Where a force F_{Ed} parallel to the longitudinal axis of the composite beam is applied to the concrete or steel element by a bonded or unbonded tendon, the distribution of the concentrated longitudinal shear force $V_{L,Ed}$ along the interface between steel and concrete, should be determined according to (2) or (3). The distribution of $V_{L,Ed}$ caused by several forces F_{Ed} should be obtained by summation.

(2) The force $V_{L,Ed}$ may be assumed to be distributed along a length L_v of shear connection with a maximum shear force per unit length given by equation (6.12) and (Fig. 6.12a) for load introduction within a length of a concrete flange and by equation (6.13) and (Fig. 6.12b) at an end of a concrete flange.

$$v_{L,Ed,max} = V_{L,Ed} / (e_d + b_{eff}/2), \quad (6.12)$$

$$v_{L,Ed,max} = 2\, V_{L,Ed} / (e_d + b_{eff}/2). \quad (6.13)$$

where

b_{eff} is the effective width for global analysis, given by 5.4.1.2,

e_d is either $2e_h$ or $2e_v$ (the length over which the force F_{Ed} is applied may be added to e_d)

e_h is the lateral distance from the point of application of force F_{Ed} to the relevant steel web, if it is applied to the slab,

e_v is the vertical distance from the point of application of force F_{Ed} to the plane of the shear connection concerned, if it is applied to the steel element.

(3) Where stud shear connectors are used, at ultimate limit states a rectangular distribution of shear force per unit length may be assumed within the length L_v , so that within a length of concrete flange,

$$v_{L,Ed,max} = V_{L,Ed} / (e_d + b_{eff}) \quad (6.14)$$

and at an end of a flange,

$$v_{L,Ed,max} = 2\, V_{L,Ed} / (e_d + b_{eff}). \quad (6.15)$$

(4) In the absence of a more precise determination, the force F_{Ed} - $V_{L,Ed}$ may be assumed to disperse into the concrete or steel element at an angle of spread 2β, where β = arc tan 2/3.

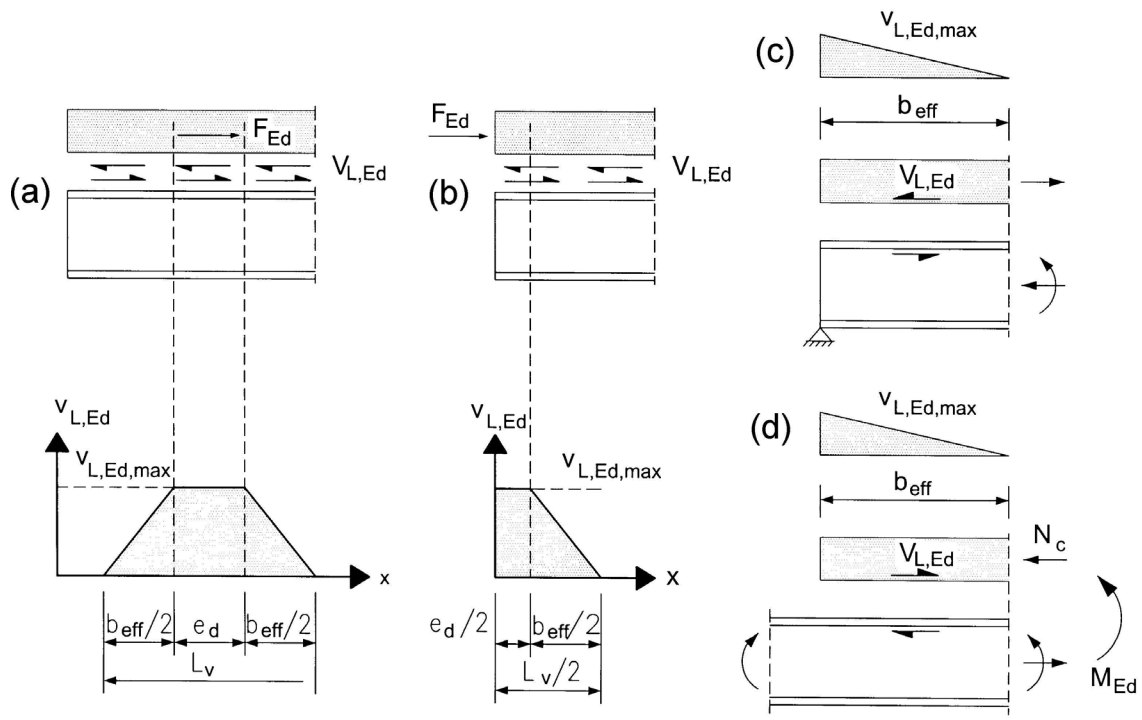

Figure 6.12: Distribution of longitudinal shear force along the interface

6.6.2.4 Local effects of concentrated longitudinal shear forces at sudden change of cross-sections

(1) Concentrated longitudinal shear at the end of the concrete slab, e.g. due to the primary effects of shrinkage and thermal actions in accordance with EN 1991-1-5 should be considered (see Figure 6.12c), and taken into account where appropriate. This applies also for intermediate stages of construction of a concrete slab (Fig. 6.12d).

(2) Concentrated longitudinal shear at a sudden change of cross-sections, e.g. change from steel to composite section according to Fig. 6.12d, should be taken into account.

(3) Where the primary effects of temperature and shrinkage cause a design longitudinal shear force $V_{L,Ed}$, to be transferred across the interface between steel and concrete at each free end of the member considered, its distribution may be assumed to be triangular, with a maximum shear force per unit length (Figure 6.12c and d)

$$v_{L,Ed,max} = 2\, V_{L,Ed} / b_{eff} \qquad (6.16)$$

at the free end of the slab, where b_{eff} is the effective width for global analysis, given by 5.4.1.2(4). Where stud shear connectors are used, for the ultimate limit state the distribution may alternatively be assumed to be rectangular along a length b_{eff} adjacent to the free end of the slab.

(4) For calculating the primary effects of shrinkage at intermediate stages of the construction of a concrete slab, the equivalent span for the determination of the width b_{eff} in 6.6.2.4 should be taken as the continuous length of concrete slab where the shear connection is effective, within the span considered.

(5) Where at a sudden change of cross-section according to Figure 6.12d the concentrated longitudinal shear force results from the force N_c due to bending, the distribution given by (3) may be used.

(6) The forces transferred by shear connectors should be assumed to disperse into the concrete slab at an angle of spread 2β, where $\beta = \arctan 2/3$.

6.6.3 Headed stud connectors in solid slabs and concrete encasement

6.6.3.1 Design resistance

(1) The design shear resistance of a headed stud automatically welded in accordance with EN 14555 should be determined from:

$$P_{Rd} = \frac{0{,}8 f_u \pi d^2 / 4}{\gamma_V} \tag{6.18}$$

or:

$$P_{Rd} = \frac{0{,}29 \alpha d^2 \sqrt{f_{ck} E_{cm}}}{\gamma_V} \tag{6.19}$$

whichever is smaller, with:

$$\alpha = 0{,}2\left(\frac{h_{sc}}{d} + 1\right) \quad \text{for } 3 \le h_{sc}/d \le 4 \tag{6.20}$$

$$\alpha = 1 \quad \text{for } h_{sc}/d > 4 \tag{6.21}$$

where:

γ_V is the partial factor;

d is the diameter of the shank of the stud, 16 mm $\le d \le$ 25 mm;

f_u is the specified ultimate tensile strength of the material of the stud but not greater than 500 N/mm^2;

f_{ck} is the characteristic cylinder compressive strength of the concrete at the age considered, of density not less than 1750 kg/m^3;

h_{sc} is the overall nominal height of the stud.

NOTE: The value for γ_V may be given in the National Annex. The recommended value for γ_V is 1,25.

(2) The weld collars should comply with the requirements of EN 13918.

(3) Where studs are arranged in a way such that splitting forces occur in the direction of the slab thickness, (1) is not applicable.

(4) For studs of diameter greater than 25 mm, or studs with weld collars which do not comply with the requirements of EN ISO 13918, the formulae in 6.6.3.1(1) should be verified by tests, see B.2 of EN 1994-1-1, before being used.

6.6.3.2 Influence of tension on shear resistance

(1) Where headed stud connectors are subjected to direct tensile force in addition to shear, the design tensile force per stud F_{ten} should be calculated.

(2) If $F_{ten} \leq 0{,}1P_{Rd}$, where P_{Rd} is the design shear resistance defined in 6.6.3.1, the tensile force may be neglected.

(3) If $F_{ten} > 0{,}1P_{Rd}$, the connection is not within the scope of EN 1994.

6.6.4 Headed studs that cause splitting in the direction of the slab thickness

(1) Where, in bridges, headed stud connectors are arranged in such a way that splitting forces can occur in the direction of the slab thickness (see Fig. 6.13) and where there is no transverse shear, the design resistance to longitudinal shear may be determined according to 6.6.3.1(1), provided that (2) and (3) are fulfilled.

NOTE: Where the conditions in (1) are not fulfilled, design rules are given in the informative Annex C

(2) Transverse reinforcement should be provided, as shown in Figure 6.13, such that $e_v \geq 6d$, and the anchoring length v should be greater than or equal to $14d$.

(3) The splitting force should be resisted by stirrups which should be designed for a tensile force $0.3P_{Rd}$ per stud connector. The spacing of these stirrups should not exceed the smaller of $18d$ and the longitudinal spacing of the connectors.

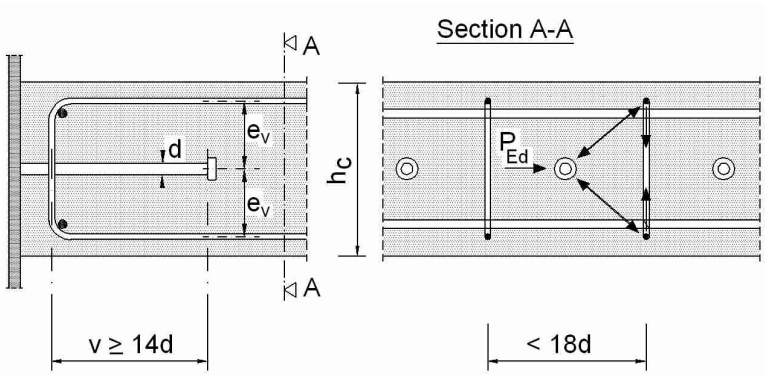

Figure 6.13: Local reinforcement for splitting forces

6.6.5 Detailing of the shear connection and influence of execution

6.6.5.1 Resistance to separation

(1) The surface of a connector that resists separation forces (for example, the underside of the head of a stud) should extend not less than 30 mm clear above the bottom reinforcement, see Figure 6.14.

6.6.5.2 Cover and concreting for bridges

(1)P The detailing of shear connectors shall be such that concrete can be adequately compacted around the base of the connector.

(2) Cover over shear connectors should be not less than that required for reinforcement adjacent to the same surface of concrete.

(3) In execution, the rate and sequence of concreting should be required to be such that partly matured concrete is not damaged as a result of limited composite action occurring from deformation of the steel beams under subsequent concreting operations. Wherever possible, deformation should not be imposed on a shear connection until the concrete has reached a cylinder strength of at least 20 N/mm^2.

6.6.5.3 Local reinforcement in the slab

(1) Where the shear connection is adjacent to a longitudinal edge of a concrete slab, transverse reinforcement provided in accordance with 6.6.6 should be fully anchored in the concrete between the edge of the slab and the adjacent row of connectors.

(2) To prevent longitudinal splitting of the concrete flange caused by the shear connectors, the following additional recommendations should be applied where the distance from the edge of the concrete flange to the centreline of the nearest row of shear connectors is less than 300 mm:

a) transverse reinforcement should be supplied by U-bars passing around the shear connectors,
b) where headed studs are used as shear connectors, the distance from the edge of the concrete flange to the centre of the nearest stud should not be less than 6*d*, where *d* is the nominal diameter of the stud, and the U-bars should be not less than 0,5*d* in diameter and
c) the U-bars should be placed as low as possible while still providing sufficient bottom cover.

(3)P At the end of a composite cantilever, sufficient local reinforcement shall be provided to transfer forces from the shear connectors to the longitudinal reinforcement.

6.6.5.4 Haunches other than formed by profiled steel sheeting

(1) Where a concrete haunch is used between the steel section and the soffit of the concrete slab, the sides of the haunch should lie outside a line drawn at 45° from the outside edge of the connector, see Figure 6.14.

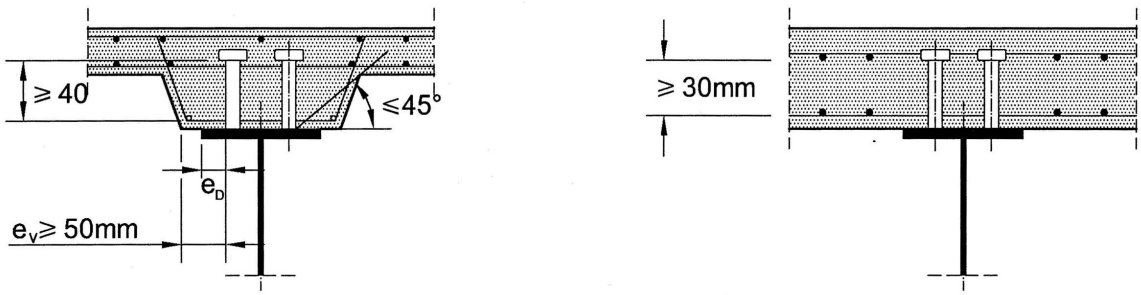

Figure 6.14 : Detailing

(2) The nominal concrete cover from the side of the haunch to the connector should be not less than 50 mm.

(3) Transverse reinforcing bars sufficient to satisfy the requirements of 6.6.6 should be provided in the haunch at not less than 40 mm clear below the surface of the connector that resists uplift.

6.6.5.5 Spacing of connectors

(1)P Where it is assumed in design that the stability of either the steel or the concrete member is ensured by the connection between the two, the spacing of the shear connectors shall be sufficiently close for this assumption to be valid.

(2) Where a steel compression flange that would otherwise be in a lower class is assumed to be in Class 1 or Class 2 because of restraint from shear connectors, the centre-to-centre spacing of the shear connectors in the direction of compression should be not greater than the following limits:

– where the slab is in contact over the full length (e.g. solid slab): $22\ t_f\sqrt{235/f_y}$

– where the slab is not in contact over the full length (e.g. slab with ribs transverse to the beam): $15\ t_f\sqrt{235/f_y}$

where:

t_f is the thickness of the flange;

f_y is the nominal yield strength of the flange in N/mm^2.

In addition, the clear distance from the edge of a compression flange to the nearest line of shear connectors should be not greater than $9\ t_f\sqrt{235/f_y}$.

(3) The maximum longitudinal centre-to-centre spacing of individual shear connectors should not exceed the lesser of four times the slab thickness and 800 mm.

(4) Connectors may be placed in groups, with the spacing of groups greater than that specified for individual shear connectors, provided that consideration is given in design to:

- the non-uniform flow of longitudinal shear,
- the greater possibility of slip and vertical separation between the slab and the steel member,
- buckling of the steel flange, and
- the local resistance of the slab to the concentrated force from the connectors.

6.6.5.6 Dimensions of the steel flange

(1)P The thickness of the steel plate or flange to which a connector is welded shall be sufficient to allow proper welding and proper transfer of load from the connector to the plate without local failure or excessive deformation.

(2) The distance e_D between the edge of a connector and the edge of the flange of the beam to which it is welded, see Figure 6.14, should not be less than 25 mm.

6.6.5.7 Headed stud connectors

(1) The overall height of a stud should be not less than 3*d*, where *d* is the diameter of the shank.

(2) The head should have a diameter of not less than 1,5*d* and a depth of not less than 0,4*d*.

(3) For elements in tension and subjected to fatigue loading, the diameter of a welded stud should not exceed 1,5 times the thickness of the flange to which it is welded, unless test information is provided to establish the fatigue resistance of the stud as a shear connector. This applies also to studs directly over a web.

(4) The spacing of studs in the direction of the shear force should be not less than 5*d*; the spacing in the direction transverse to the shear force should be not less than 2,5*d* in solid slabs and 4*d* in other cases.

(5) Except when the studs are located directly over the web, the diameter of a welded stud should be not greater than 2,5 times the thickness of that part to which it is welded, unless test information is provided to establish the resistance of the stud as a shear connector.

6.6.6 Longitudinal shear in concrete slabs

6.6.6.1 General

(1)P Transverse reinforcement in the slab shall be designed for the ultimate limit state so that premature longitudinal shear failure or longitudinal splitting shall be prevented.

(2)P The design longitudinal shear stress for any potential surface of longitudinal shear failure within the slab $v_{L,Ed}$ shall not exceed the design longitudinal shear strength of the shear surface considered.

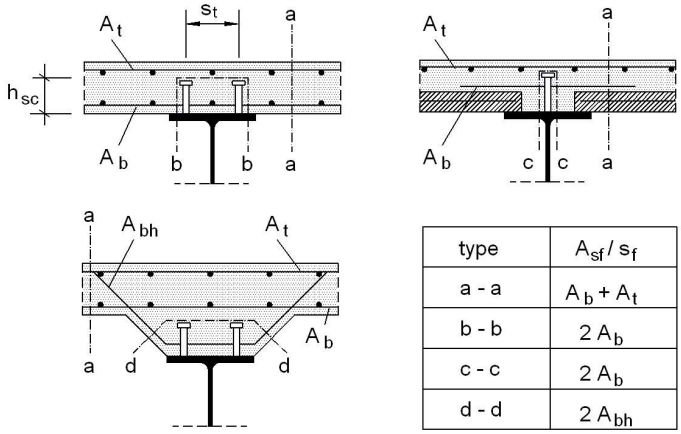

Figure 6.15 : Typical potential surfaces of shear failure

(3) The length of the shear surface c-c shown in Figure 6.15 should be taken as equal to $2h_{sc}$ plus the head diameter for a single row of stud shear connectors or staggered stud connectors, or as equal to ($2h_{sc}$ + s_t) plus the head diameter for stud shear connectors arranged in pairs (surface b-b in Figure 6.15), where h_{sc} is the height of the studs and s_t is the transverse spacing centre-to-centre of the studs.

(4) The design longitudinal shear per unit length of beam on a shear surface should be determined in accordance with 6.6.2 and be consistent with the design and spacing of the shear connectors. Account may be taken of the variation of longitudinal shear across the width of the concrete flange.

(5) For each type of shear surface considered, the design longitudinal shear stress $v_{L,Ed}$ should be determined from the design longitudinal shear per unit length of beam, taking account of the number of shear planes and the length of shear surface.

6.6.6.2 Design resistance to longitudinal shear

(1) The design shear strength of the concrete flange (shear planes a-a illustrated in Figure 6.15) should be determined in accordance with EN 1992-1-1, 6.2.4.

(2) In the absence of a more accurate calculation the design shear strength of any surface of potential shear failure in the flange or a haunch may be determined from EN 1992-1-1, 6.2.4(4). For a shear surface passing around the shear connectors (e.g. shear surface b-b in Figure 6.15), the dimension h_f should be taken as the length of the shear surface.

(3) The effective transverse reinforcement per unit length, A_{sf} / s_f in EN 1992-1-1, should be as shown in Figure 6.15, in which A_b, A_t and A_{bh} are areas of reinforcement per unit length of beam anchored in accordance with EN 1992-1-1, 8.4 for longitudinal reinforcement.

(4) Where a combination of pre-cast elements and in-situ concrete is used, the resistance to longitudinal shear should be determined in accordance with EN 1992-1-1, 6.2.5.

6.6.6.3 Minimum transverse reinforcement

(1) The minimum area of reinforcement should be determined in accordance with EN 1992-1-1, 9.2.2(5) using definitions appropriate to transverse reinforcement.

6.7 Composite columns and composite compression members

6.7.1 General

(1)P Clause 6.7 applies for the design of composite columns and composite compression members with concrete encased sections, partially encased sections and concrete filled rectangular and circular tubes, see Figure 6.17.

(2)P This clause applies to columns and compression members with steel grades S235 to S460 and normal weight concrete of strength classes C20/25 to C50/60.

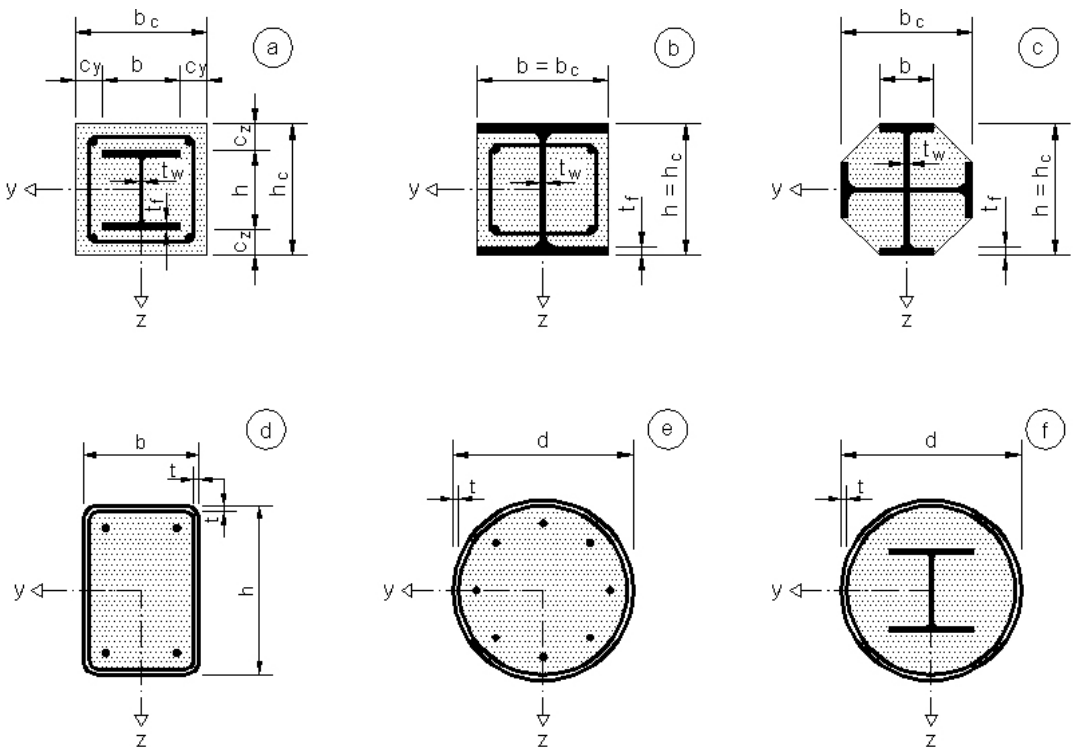

Figure 6.17 : Typical cross-sections of composite columns and notation

(3) This clause applies to isolated columns and columns and composite compression members in framed structures where the other structural members are either composite or steel members.

(4) The steel contribution ratio δ should fulfil the following condition:

$$0.2 \leq \delta \leq 0.9 \qquad (6.27)$$

where δ is defined in 6.7.3.3(1).

(5) Composite columns or compression members of any cross-section should be checked for:

- resistance of the member in accordance with 6.7.2 or 6.7.3;
- resistance to local buckling in accordance with (8) and (9) below;
- introduction of loads in accordance with 6.7.4.2 and
- resistance to shear between steel and concrete elements in accordance with 6.7.4.3.

(6) Two methods of design are given:

- a general method in 6.7.2 whose scope includes members with non-symmetrical or non-uniform cross-sections over the column length and
- a simplified method in 6.7.3 for members of doubly symmetrical and uniform cross section over the member length.

(7) For composite compression members subjected to bending moments and normal forces resulting from independent actions, the partial factor γ_F for those internal forces that lead to an increase of resistance should be reduced by 20%.

Table 6.3 : Maximum values (*d/t*), (*h/t*) and (*b/t*$_f$) with *f*$_y$ in N/mm^2

Cross-section		max (*d/t*), max (*h/t*) and max (*b/t*)
Circular hollow steel sections	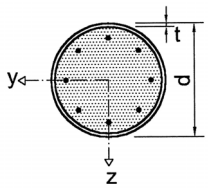	$\max\ (d/t) = 90\dfrac{235}{f_y}$
Rectangular hollow steel sections	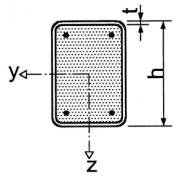	$\max\ (h/t) = 52\sqrt{\dfrac{235}{f_y}}$
Partially encased I-sections	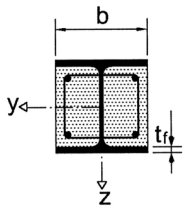	$\max\ (b/t_f) = 44\sqrt{\dfrac{235}{f_y}}$

(8)P The influence of local buckling of the steel section on the resistance shall be considered in design.

(9) The effects of local buckling may be neglected for a steel section fully encased in accordance with 6.7.5.1(2), and for other types of cross-section provided the maximum values of Table 6.3 are not exceeded.

6.7.2 General method of design

(1)P Design for structural stability shall take account of second-order effects including residual stresses, geometrical imperfections, local instability, cracking of concrete, creep and shrinkage of concrete and yielding of structural steel and of reinforcement. The design shall ensure that instability does not occur for the most unfavourable combination of actions at the ultimate limit state and that the resistance of individual cross-sections subjected to bending, longitudinal force and shear is not exceeded.

(2)P Second-order effects shall be considered in any direction in which failure might occur, if they affect the structural stability significantly.

(3)P Internal forces shall be determined by elasto-plastic analysis.

(4) Plane sections may be assumed to remain plane. Full composite action up to failure may be assumed between the steel and concrete components of the member.

(5)P The tensile strength of concrete shall be neglected. The influence of tension stiffening of concrete between cracks on the flexural stiffness may be taken into account.

(6)P Shrinkage and creep effects shall be considered if they are likely to reduce the structural stability significantly.

(7) For simplification, creep and shrinkage effects may be ignored if the increase in the first-order bending moments due to creep deformations and longitudinal force resulting from permanent loads is not greater than 10%.

(8) The following stress-strain relationships should be used in the non-linear analysis :

- for concrete in compression as given in EN 1992-1-1, 3.1.5;
- for reinforcing steel as given in EN 1992-1-1, 3.2.7;
- for structural steel as given in EN 1993-1-1, 5.4.3(4).

(9) For simplification, instead of the effect of residual stresses and geometrical imperfections, equivalent initial bow imperfections (member imperfections) may be used in accordance with Table 6.5.

6.7.3 Simplified method of design

6.7.3.1 General and scope

(1) The scope of this simplified method is limited to members of doubly symmetrical and uniform cross-section over the member length with rolled, cold-formed or welded steel sections. The simplified method is not applicable if the structural steel component consists of two or more unconnected sections. The relative slenderness $\bar{\lambda}$ defined in 6.7.3.3 should fullfil the following condition:

$$\bar{\lambda} \leq 2{,}0 \qquad (6.28)$$

(2) For a fully encased steel section, see Figure 6.17a, limits to the maximum thickness of concrete cover that may be used in calculation are:

$$\max c_z = 0.3h \qquad \max c_y = 0.4\,b \tag{6.29}$$

(3) The longitudinal reinforcement that may be used in calculation should not exceed 6% of the concrete area.

(4) The ratio of the cross-section's depth to width of the composite section should be within the limits 0.2 and 5.0.

6.7.3.2 Resistance of cross - sections

(1) The plastic resistance to compression $N_{pl,Rd}$ of a composite cross-section should be calculated by adding the plastic resistances of its components:

$$N_{pl,Rd} = A_a\, f_{yd} + 0.85\, A_c\, f_{cd} + A_s\, f_{sd} \tag{6.30}$$

Expression (6.30) applies for concrete encased and partially concrete encased steel sections. For concrete filled sections the coefficient 0.85 may be replaced by 1.0.

(2) The resistance of a cross-section to combined compression and bending and the corresponding interaction curve may be calculated assuming rectangular stress blocks as shown in Figure 6.18, taking account of the design shear force V_{Ed} in accordance with (3). The tensile strength of the concrete should be neglected.

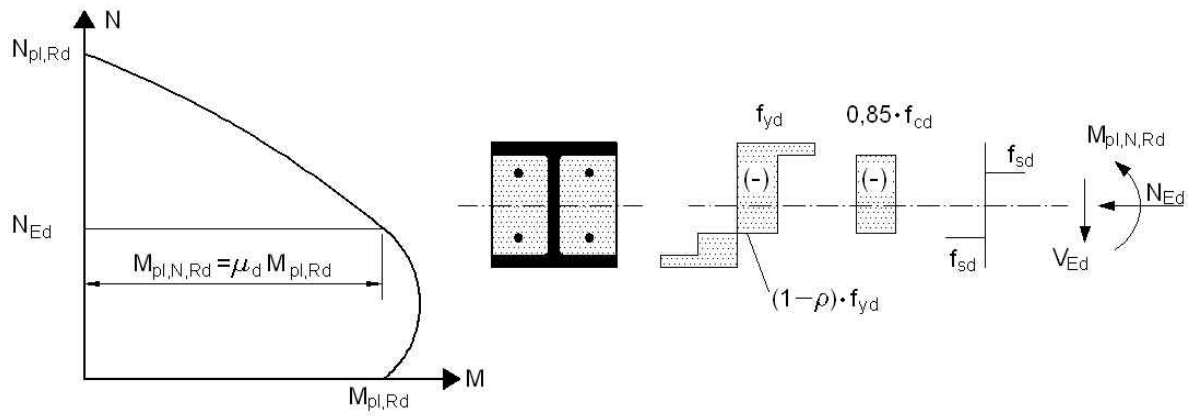

Figure 6.18: Interaction curve for combined compression und uniaxial bending

(3) The influence of transverse shear forces on the resistance to bending and normal force should be considered when determining the interaction curve, if the shear force $V_{a,Ed}$ on the steel section exceeds 50% of the design shear resistance $V_{pl,a,Rd}$ of the steel section, see 6.2.2.2.

Where $V_{a,Ed} > 0{,}5V_{pl,a,Rd}$, the influence of the transverse shear on the resistance in combined bending and compression should be taken into account by a reduced design steel strength $(1 - \rho)\, f_{yd}$ in the shear area A_v in accordance with 6.2.2.4(2) and Figure 6.18.

The shear force $V_{a,Ed}$ should not exceed the resistance to shear of the steel section determined according to 6.2.2. The resistance to shear $V_{c,Ed}$ of the reinforced concrete part should be verified in accordance with EN 1992-1-1, 6.2.

(4) Unless a more accurate analysis is used, V_{Ed} may be distributed into $V_{a,Ed}$ acting on the structural steel and $V_{c,Ed}$ acting on the reinforced concrete section by :

$$V_{a,Ed} = V_{Ed} \frac{M_{pl,a,Rd}}{M_{pl,Rd}} \tag{6.31}$$

$$V_{c,Ed} = V_{Ed} - V_{a,Ed} \tag{6.32}$$

where:

$M_{pl,a,Rd}$ is the plastic resistance moment of the steel section and

$M_{pl,Rd}$ is the plastic resistance moment of the composite section.

For simplification V_{Ed} may be assumed to act on the structural steel section alone.

(5) As a simplification, the interaction curve may be replaced by a polygonal diagram (the dashed line in Figure 6.19). Figure 6.19 shows as an example the plastic stress distribution of a fully encased cross section for the points A to D. $N_{pm,Rd}$ should be taken as 0.85 f_{cd} A_c for concrete encased and partially concrete encased sections, see Figures 6.17a – c, and as f_{cd} A_c for concrete filled sections, see Figures 6.17d - f.

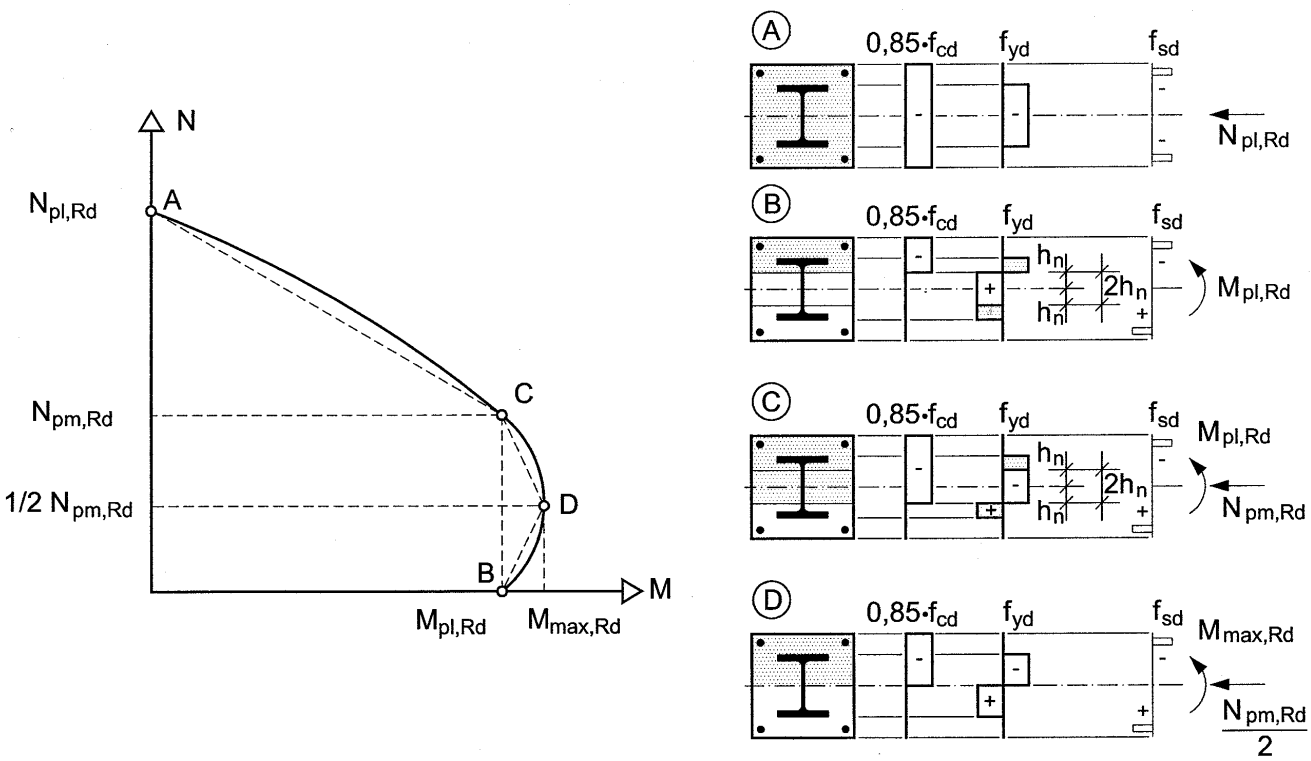

Figure 6.19 : Simplified interaction curve and corresponding stress distributions

(6) For concrete filled tubes of circular cross-section, account may be taken of increase in strength of concrete caused by confinement provided that the relative slenderness $\bar{\lambda}$ defined in 6.7.3.3 does not exceed 0.5 and $e/d < 0{,}1$, where e is the eccentricity of loading given by M_{Ed} / N_{Ed} and d is the external diameter of the column. The plastic resistance to compression may then be calculated from the following expression:

$$N_{pl,Rd} = \eta_a A_a f_{yd} + A_c f_{cd}\left(1+\eta_c \frac{t}{d}\frac{f_y}{f_{ck}}\right) + A_s f_{sd} \tag{6.33}$$

where t is the wall thickness of the steel tube.

For members with $e = 0$ the values $\eta_a = \eta_{ao}$ and $\eta_c = \eta_{co}$ are given by the following expressions:

$$\eta_{ao} = 0.25\,(3 + 2\bar{\lambda}) \qquad \text{(but } \leq 1{,}0) \tag{6.34}$$

$$\eta_{co} = 4.9 - 18.5\bar{\lambda} + 17\bar{\lambda}^2 \qquad \text{(but } \geq 0) \tag{6.35}$$

For members in combined compression and bending with $0 < e/d \leq 0{,}1$, the values η_a and η_c should be determined from (6.36) and (6.37), where η_{ao} and η_{co} are given by (6.34) and (6.35):

$$\eta_a = \eta_{ao} + (1 - \eta_{ao})\,(10\,e/d) \tag{6.36}$$

$$\eta_c = \eta_{co}\,(1 - 10\,e/d) \tag{6.37}$$

For $e/d > 0.1$, $\eta_a = 1{,}0$ and $\eta_c = 0$.

6.7.3.3 Effective flexural stiffness, steel contribution ratio and relative slenderness

(1) The steel contribution ratio δ is defined as:

$$\delta = \frac{A_a f_{yd}}{N_{pl,Rd}} \tag{6.38}$$

where $N_{pl,Rd}$ is the plastic resistance to compression defined in 6.7.3.2(1).

(2) The relative slenderness $\bar{\lambda}$ for the plane of bending being considered is given by:

$$\bar{\lambda} = \sqrt{\frac{N_{pl,Rk}}{N_{cr}}} \tag{6.39}$$

where:

$N_{pl,Rk}$ is the characteristic value of the plastic resistance to compression given by (6.30) if, instead of the design strengths, the characteristic values are used;

N_{cr} is the elastic critical normal force for the relevant buckling mode, calculated with the effective flexural stiffness $(EI)_{eff}$ determined in accordance with (3) and (4).

(3) For the determination of the relative slenderness $\bar{\lambda}$ and the elastic critical force N_{cr}, the characteristic value of the effective flexural stiffness $(EI)_{eff}$ of a cross section of a composite column should be calculated from:

$$(E\,I)_{eff} = E_a I_a + E_s I_s + K_e\, E_{cm}\, I_c \tag{6.40}$$

where:

K_e is a correction factor that should be taken as 0.6.

I_a, I_c, and I_s are the second moments of area of the structural steel section, the un-cracked concrete section and the reinforcement for the bending plane being considered.

(4) Account should be taken to the influence of long-term effects on the effective elastic flexural stiffness. The modulus of elasticity of concrete E_{cm} should be reduced to the value $E_{c,eff}$ in accordance with the following expression:

$$E_{c,eff} = E_{cm} \frac{1}{1 + (N_{G,Ed} / N_{Ed}) \varphi_t} \tag{6.41}$$

where:

φ_t is the creep coefficient according to 5.4.2.2(2);

N_{Ed} is the total design normal force;

$N_{G,Ed}$ is the part of this normal force that is permanent.

6.7.3.4 Methods of analysis and member imperfections

(1) For member verification, analysis should be based on second-order linear elastic analysis.

(2) For the determination of the internal forces the design value of effective flexural stiffness $(EI)_{eff,II}$ should be determined from the following expression:

$$(E\,I)_{eff,II} = K_o\,(E_a I_a + E_s I_s + K_{e,II}\,E_{cm}\,I_c) \tag{6.42}$$

where:

$K_{e,II}$ is a correction factor which should be taken as 0.5;

K_o is a calibration factor which should be taken as 0.9.

Long-term effects should be taken into account in accordance with 6.7.3.3 (4).

(3) Second-order effects need not to be considered where 5.2.1(3) applies and the elastic critical load is determined with the flexural stiffness $(EI)_{eff,II}$ in accordance with (2).

(4) The influence of geometrical and structural imperfections may be taken into account by equivalent geometrical imperfections. Equivalent member imperfections for composite columns are given in Table 6.5, where L is the column length.

(5) Within the column length, second-order effects may be allowed for by multiplying the greatest first-order design bending moment M_{Ed} by a factor k given by:

$$k = \frac{\beta}{1 - N_{Ed} / N_{cr,eff}}\,, \quad \geq 1.0 \tag{6.43}$$

where:

$N_{cr,eff}$ is the critical normal force for the relevant axis and corresponding to the effective flexural stiffness given in 6.7.3.4(2), with the effective length taken as the column length;

β is an equivalent moment factor given in Table 6.4.

Table 6.4 Factors β for the determination of moments to second order theory

Moment distribution	Moment factors β	Comment
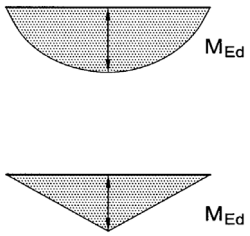	First-order bending moments from member imperfection or lateral load: $\beta = 1.0$	M_{Ed} is the maximum bending moment within the column length ignoring second-order effects
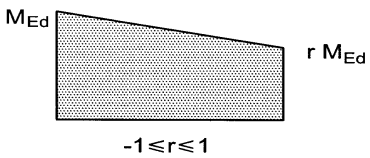	End moments: $\beta = 0.66 + 0{,}44r$ but $\beta \geq 0.44$	M_{Ed} and $r\ M_{Ed}$ are the end moments from first-order or second-order global analysis

6.7.3.5 Resistance of members in axial compression

(1) Members may be verified using second order analysis according to 6.7.3.6 taking into account member imperfections.

(2) For simplification for members in axial compression, the design value of the normal force N_{Ed} should satisfy:

$$\frac{N_{Ed}}{\chi N_{pl,Rd}} \leq 1.0 \qquad (6.44)$$

where:

$N_{pl,Rd}$ is the plastic resistance of the composite section according to 6.7.3.2(1), but with f_{yd} determined using the partial factor γ_{M1} given by EN 1993-1-1, 6.1(1);

χ is the reduction factor for the relevant buckling mode given in EN 1993-1-1, 6.3.1.2 in terms of the relevant relative slenderness $\bar{\lambda}$.

The relevant buckling curves for cross-sections of composite columns are given in Table 6.5, where ρ_s is the reinforcement ratio A_s / A_c.

Table 6.5 : Buckling curves and member imperfections for composite columns

Cross-section	Limits	Axis of buckling	Buckling curve	Member imperfection
concrete encased section 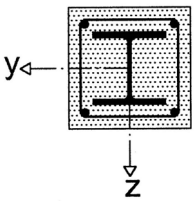		y-y	b	*L*/200
		z-z	c	*L*/150
partially concrete encased section 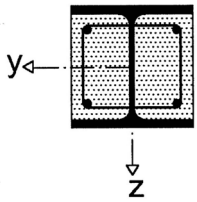		y-y	b	*L*/200
		z-z	c	*L*/150
circular and rectangular hollow steel section 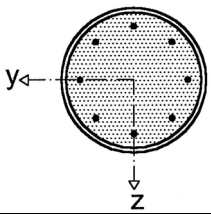	$\rho_s \leq 3\%$	any	a	*L*/300
	$3\% < \rho_s \leq 6\%$	any	b	*L*/200
circular hollow steel sections with additional I-section 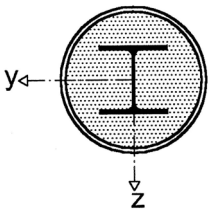		y-y	b	*L*/200
		z-z	b	*L*/200
partially concrete encased section with crossed I-sections 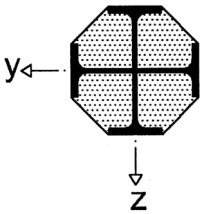		any	b	*L*/200

6.7.3.6 Resistance of members in combined compression and uniaxial bending

(1) The following expression based on the interaction curve determined according to 6.7.3.2 (2) - (5) should be satisfied:

$$\frac{M_{\mathrm{Ed}}}{M_{\mathrm{pl,N,Rd}}} = \frac{M_{\mathrm{Ed}}}{\mu_{\mathrm{d}}\ M_{\mathrm{pl,Rd}}} \leq \alpha_{\mathrm{M}} \tag{6.45}$$

where:

M_{Ed} is the greatest of the end moments and the maximum bending moment within the column length, calculated according to 6.7.3.4, including imperfections and second order effects if necessary;

$M_{\mathrm{pl,N,Rd}}$ is the plastic bending resistance taking into account the normal force N_{Ed}, given by $\mu_{\mathrm{d}}\ M_{\mathrm{pl,Rd}}$, see Figure 6.18;

$M_{\mathrm{pl,Rd}}$ is the plastic bending resistance, given by point B in Figure 6.19.

For steel grades between S235 and S355 inclusive, the coefficient α_{M} should be taken as 0.9 and for steel grades S420 and S460 as 0.8.

(2) The value $\mu_{\mathrm{d}} = \mu_{\mathrm{dy}}$ or μ_{dz} , see Figure 6.20, refers to the design plastic resistance moment $M_{\mathrm{pl,Rd}}$ for the plane of bending being considered. Values μ_{d} greater than 1.0 should only be used where the bending moment M_{Ed} depends directly on the action of the normal force N_{Ed}, for example where the moment M_{Ed} results from an eccentricity of the normal force N_{Ed}. Otherwise an additional verification is necessary in accordance with clause 6.7.1 (7).

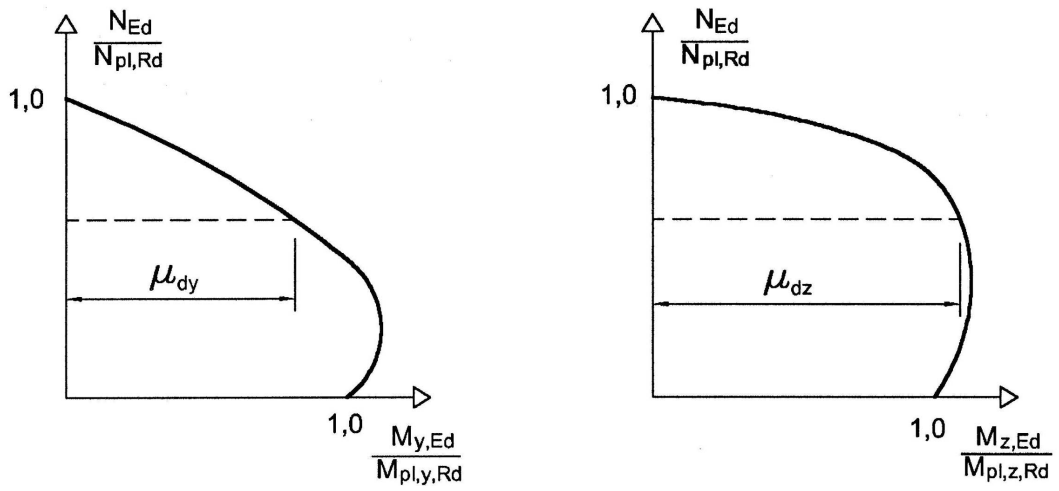

Figure 6.20 : Design for compression and biaxial bending

6.7.3.7 Combined compression and biaxial bending

(1) For composite columns and compression members with biaxial bending the values μ_{dy} and μ_{dz} in Figure 6.20 may be calculated according to 6.7.3.6 separately for each axis. Imperfections should be considered only in the plane in which failure is expected to occur. If it is not evident which plane is the more critical, checks should be made for both planes.

(2) For combined compression and biaxial bending the following conditions should be satisfied for the stability check within the column length and for the check at the end:

$$\frac{M_{y,Ed}}{\mu_{dy} M_{pl,y,Rd}} \leq \alpha_{M,y} \qquad \frac{M_{z,Ed}}{\mu_{dz} M_{pl,z,Rd}} \leq \alpha_{M,z} \tag{6.46}$$

$$\frac{M_{y,Ed}}{\mu_{dy} M_{pl,y,Rd}} + \frac{M_{z,Ed}}{\mu_{dz} M_{pl,z,Rd}} \leq 1.0 \tag{6.47}$$

where:

$M_{pl,y,Rd}$ and $M_{pl,z,Rd}$ are the plastic bending resistances of the relevant plane of bending;

$M_{y,Ed}$ and $M_{z,Ed}$ are the design bending moments including second-order effects and imperfections according to 6.7.3.4;

μ_{dy} and μ_{dz} are defined in 6.7.3.6;

$\alpha_M = \alpha_{M,y}$ and $\alpha_M = \alpha_{M,z}$ are given in 6.7.3.6(1).

6.7.4 Shear connection and load introduction

6.7.4.1 General

(1)P Provision shall be made in regions of load introduction for internal forces and moments applied from members connected to the ends and for loads applied within the length to be distributed between the steel and concrete components, considering the shear resistance at the interface between steel and concrete. A clearly defined load path shall be provided that does not involve an amount of slip at this interface that would invalidate the assumptions made in design.

(2)P Where composite columns and compression members are subjected to significant transverse shear, as for example by local transverse loads and by end moments, provision shall be made for the transfer of the corresponding longitudinal shear stress at the interface between steel and concrete.

(3) For axially loaded columns and compression members, longitudinal shear outside the areas of load introduction need not be considered.

6.7.4.2 Load introduction

(1) Shear connectors should be provided in the load introduction area and in areas with change of cross section, if the design shear strength τ_{Rd}, see 6.7.4.3, is exceeded at the interface between steel and concrete. The shear forces should be determined from the change of sectional forces of the steel or reinforced concrete section within the introduction length. If the loads are introduced into the concrete cross section only, the values resulting from an elastic analysis considering creep and shrinkage should be taken into account. Otherwise, the forces at the interface should be determined by elastic theory or plastic theory, to determine the more severe case.

(2) In absence of a more accurate method, the introduction length should not exceed $2d$ or $L/3$, where d is the minimum transverse dimension of the column and L is the column length.

(3) For composite columns and compression members no shear connection need be provided for load introduction by endplates if the full interface between the concrete section and endplate is permanently in compression, taking account of creep and shrinkage. Otherwise the load introduction should be verified according to (5). For concrete filled tubes of circular cross-section the effect caused by the confinement may be taken into account if the conditions given in 6.7.3.2(6) are satisfied using the values η_a and η_c for $\bar{\lambda}$ equal to zero.

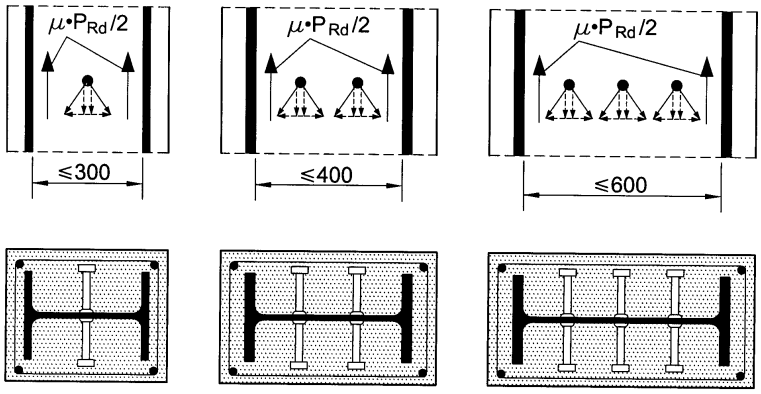

Figure 6.21 : Additional frictional forces in composite columns by use of headed studs

(4) Where stud connectors are attached to the web of a fully or partially concrete encased steel I-section or a similar section, account may be taken of the frictional forces that develop from the prevention of lateral expansion of the concrete by the adjacent steel flanges. This resistance may be added to the calculated resistance of the shear connectors. The additional resistance may be assumed to be $\mu\ P_{Rd}/2$ on each flange and each horizontal row of studs, as shown in Figure 6.21, where μ is the relevant coefficient of friction that may be assumed. For steel sections without painting, μ may be taken as 0.5 P_{Rd} is the resistance of a single stud in accordance with 6.6.3.1. In absence of better information from tests, the clear distance between the flanges should not exceed the values given in Figure 6.21.

(5) If the cross-section is partially loaded (as, for example, Figure 6.22A), the loads may be distributed with a ratio of 1:2.5 over the thickness t_e of the end plate. The concrete stresses should then be limited in the area of the effective load introduction, for concrete filled hollow sections in accordance with (6) and for all other types of cross-sections in accordance with EN 1992-1-1, 6.7.

(6) If the concrete in a filled circular hollow section or a square hollow section is only partially loaded, for example by gusset plates through the profile or by stiffeners as shown in Figure 6.22, the local design strength of concrete, $\sigma_{c,Rd}$ under the gusset plate or stiffener resulting from the sectional forces of the concrete section should be determined by:

$$\sigma_{c,Rd} = f_{cd}\left(1+\eta_{cL}\frac{t}{a}\frac{f_y}{f_{ck}}\right)\sqrt{\frac{A_c}{A_1}} \leq \frac{A_c\, f_{cd}}{A_1}\ ,\ \leq f_{yd} \qquad (6.48)$$

where:

t	is the wall thickness of the steel tube;
a	is the diameter of the tube or the width of the square section;
A_c	is the cross sectional area of the concrete section of the column;
A_1	is the loaded area under the gusset plate, see Figure 6.22;
η_{cL} =	4.9 for circular steel tubes and 3.5 for square sections.

The ratio A_c/A_1 should not exceed the value 20. Welds between the gusset plate and the steel hollow sections should be designed according to EN1993-1-8, Section 4.

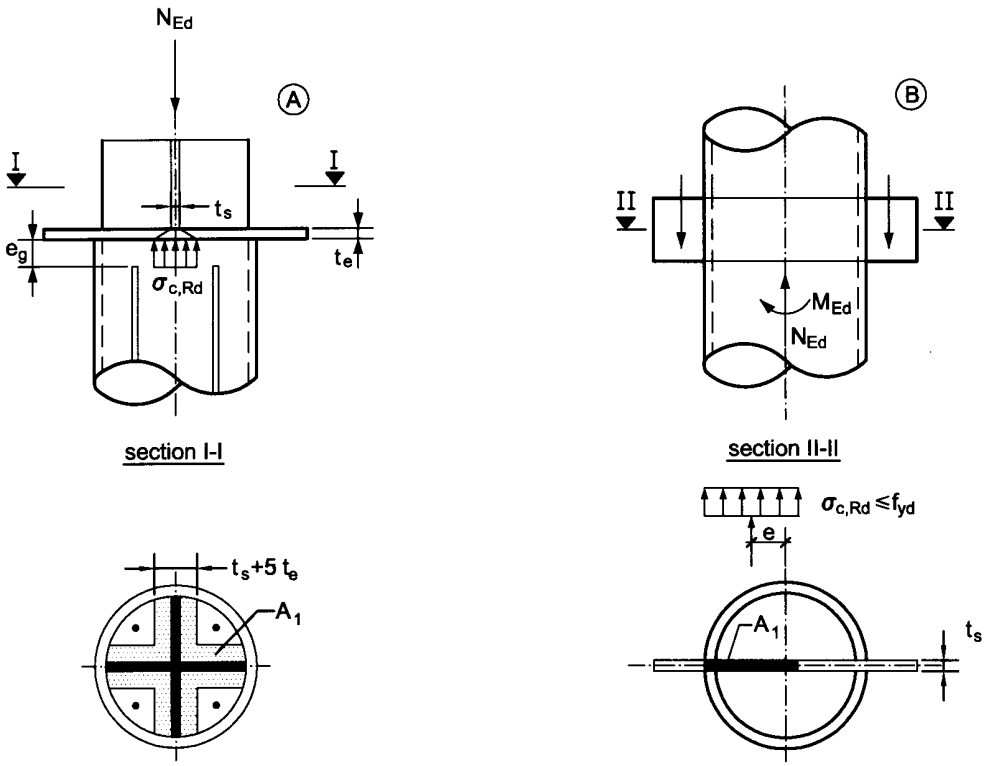

Figure 6.22 : Partially loaded circular concrete filled hollow section

(7) For concrete filled circular hollow sections, longitudinal reinforcement may be taken into account for the resistance of the column, even where the reinforcement is not welded to the end plates or in direct contact with the endplates provided that:

- verification for fatigue is not required;
- the gap e_g between the reinforcement and the end plate does not exceed 30 mm, see Figure 6.22A.

(8) Transverse reinforcement should be in accordance with EN 1992-1-1, 9.5.3. In case of partially encased steel sections, concrete should be held in place by transverse reinforcement arranged in accordance with Figure 6.10.

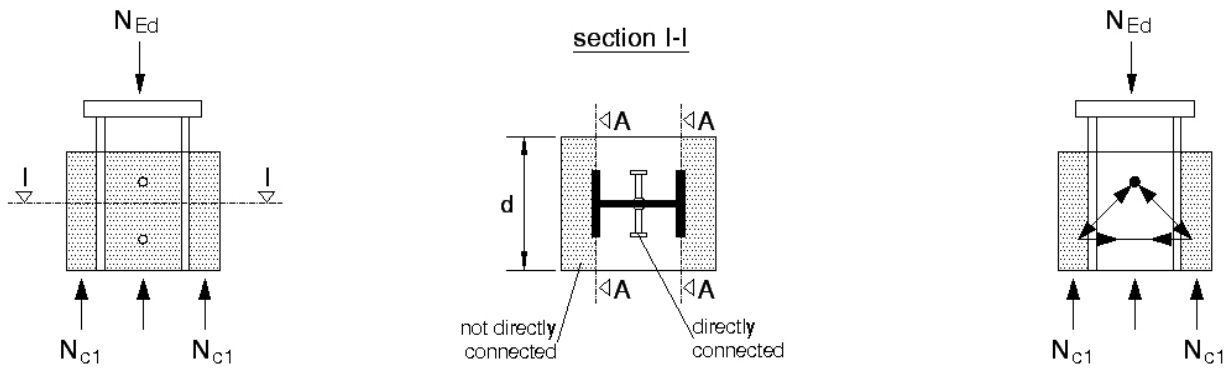

Figure 6.23 : Directly and not directly connected concrete areas for the design of transverse reinforcement

(9) In the case of load introduction through only the steel section or the concrete section, for fully encased steel sections the transverse reinforcement should be designed for the longitudinal shear that results from the transmission of normal force (N_{c1} in Figure 6.23) from the parts of concrete directly connected by shear connectors into the parts of the concrete without direct shear connection (see Figure 6.23, section A-A; the hatched area outside the flanges of Figure 6.23 should be considered as not directly connected). The design and arrangement of transverse reinforcement should be based on a truss model assuming an angle of 45° between concrete compression struts and the member axis.

6.7.4.3 Longitudinal shear outside the areas of load introduction

(1) Outside the area of load introduction, longitudinal shear at the interface between concrete and steel should be verified where it is caused by transverse loads and /or end moments. Shear connectors should be provided, based on the distribution of the design value of longitudinal shear, where this exceeds the design shear strength τ_{Rd}.

(2) In absence of a more accurate method, elastic analysis, considering long term effects and cracking of concrete, may be used to determine the longitudinal shear at the interface.

(3) Provided that the surface of the steel section in contact with the concrete is unpainted and free from oil, grease and loose scale or rust, the values given in Table 6.6 may be assumed for τ_{Rd}.

Table 6.6 : Design shear strength τ_{Rd}

Type of cross section	τ_{Rd} (N/mm^2)
Completely concrete encased steel sections	0.30
Concrete filled circular hollow sections	0.55
Concrete filled rectangular hollow sections	0.40
Flanges of partially encased sections	0.20
Webs of partially encased sections	0.00

(4) The value of τ_{Rd} given in Table 6.6 for completely concrete encased steel sections applies to sections with a minimum concrete cover of 40mm and transverse and longitudinal reinforcement in accordance with 6.7.5.2. For greater concrete cover and adequate reinforcement, higher values of τ_{Rd} may be used. Unless verified by tests, for completely encased sections the increased value $\beta_c \tau_{Rd}$ may be used, with β_c given by:

$$\beta_c = 1 + 0.02\, c_z \left(1 - \frac{c_{z,\min}}{c_z}\right) \leq 2.5 \qquad (6.49)$$

where:

c_z is the nominal value of concrete cover in mm, see Figure 6.17a;

$c_{z,\min}$ = 40 mm is the minimum concrete cover.

(5) Unless otherwise verified, for partially encased I-sections with transverse shear due to bending about the weak axis due to lateral loading or end moments, shear connectors should always be provided. If the resistance to transverse shear is not be taken as only the resistance of the structural steel, then the required transverse reinforcement for the shear force $V_{c,Ed}$ according to 6.7.3.2(4) should be welded to the web of the steel section or should pass through the web of the steel section.

6.7.5 Detailing Provisions

6.7.5.1 Concrete cover of steel profiles and reinforcement

(1)P For fully encased steel sections at least a minimum cover of reinforced concrete shall be provided to ensure the safe transmission of bond forces, the protection of the steel against corrosion and spalling of concrete.

(2) The concrete cover to a flange of a fully encased steel section should be not less than 40mm, nor less than one-sixth of the breadth *b* of the flange.

(3) The cover to reinforcement should be in accordance with EN 1992-1-1, Section 4.

6.7.5.2 Longitudinal and transverse reinforcement

(1) The longitudinal reinforcement in concrete-encased columns which is allowed for in the resistance of the cross-section should be not less than 0,3% of the cross-section of the concrete. In concrete filled hollow sections normally no longitudinal reinforcement is necessary, if design for fire resistance is not required.

(2) The transverse and longitudinal reinforcement in fully or partially concrete encased columns should be designed and detailed in accordance with EN 1992-1-1, 9.5.

(3) The clear distance between longitudinal reinforcing bars and the structural steel section may be smaller that required by (2), even zero. In this case, for bond the effective perimeter *c* of the reinforcing bar should be taken as half or one quarter of its perimeter, as shown in Figure 6.24 at (a) and (b) respectively.

(4) For fully or partially encased members, where environmental conditions are class X0 according to EN 1992-1-1, Table 4.1, and longitudinal reinforcement is neglected in design, a minimum longitudinal reinforcement of diameter 8 mm and 250 mm spacing and a transverse reinforcement of diameter 6 mm and 200 mm spacing should be provided. Alternatively welded mesh reinforcement of diameter 4 mm may be used.

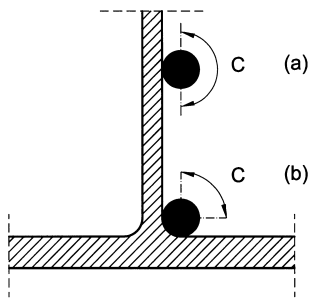

Figure 6.24 : Effective perimeter *c* of a reinforcing bar

6.8 Fatigue

6.8.1 General

(1)P The resistance of composite structures to fatigue shall be verified where the structures are subjected to repeated fluctuations of stresses.

(2)P Design for the limit state of fatigue shall ensure, with an acceptable level of probability, that during its entire design life, the structure is unlikely to fail by fatigue or to require repair of damage caused by fatigue.

(3) For headed stud shear connectors in bridges, under characteristic combination of actions the maximum longitudinal shear force per connector should not exceed $k_s\ P_{Rd}$ where P_{Rd} is determined according to 6.6.3.1.

NOTE: The factor k_s may be given in the National Annex. The recommended value is k_s=0,75.

(4) For structural steel, no fatigue assessment is required where 9.1.1(2) of EN 1993-2 applies.

(5) For concrete and reinforcement, no fatigue assessment is required where EN 1992-2, 6.8.1 or 6.8.4 applies.

6.8.2 Partial factors for fatigue assessment of bridges

(1) Partial factors γ_{Mf} for fatigue strength are given in EN 1993-2, 9.3 for steel elements and in EN 1992-1-1, 2.4.2.4 for concrete and reinforcement. For headed studs in shear, a partial factor $\gamma_{Mf,s}$ should be applied.

NOTE: The value for $\gamma_{Mf,s}$ may be given in the National Annex. The recommended value for $\gamma_{Mf,s}$ is 1,0.

(2) Partial factors for fatigue loading γ_{Ff} should be applied.

NOTE: Partial factors γ_{Ff} are given in Notes in EN 1993-2, 9.3.1, and (as $\gamma_{F,fat}$) in EN 1993-1-1, 6.8.4(1).

6.8.3 Fatigue strength

(1) The fatigue strength for structural steel and for welds should be taken from EN 1993-1-9, 7.

(2) The fatigue strength of reinforcing steel and pre-stressing steel should be taken from EN 1992-1. For concrete EN 1992-1, 6.8.5 applies.

(3) The fatigue strength curve of an automatically welded headed stud in accordance with 6.6.3.1 is shown in Fig. 6.25 and given for normal weight concrete by:

$$(\Delta\tau_R)^m N_R = (\Delta\tau_c)^m N_c \qquad (6.50)$$

where:

- $\Delta\tau_R$ is the fatigue shear strength related to the cross-sectional area of the shank of the stud, using the nominal diameter d of the shank;
- $\Delta\tau_c$ is the reference value at 2 million cycles with $\Delta\tau_c$ equal to 90 N/mm^2;
- m is the slope of the fatigue strength curve with the value m = 8;
- N_R is the number of stress-range cycles.

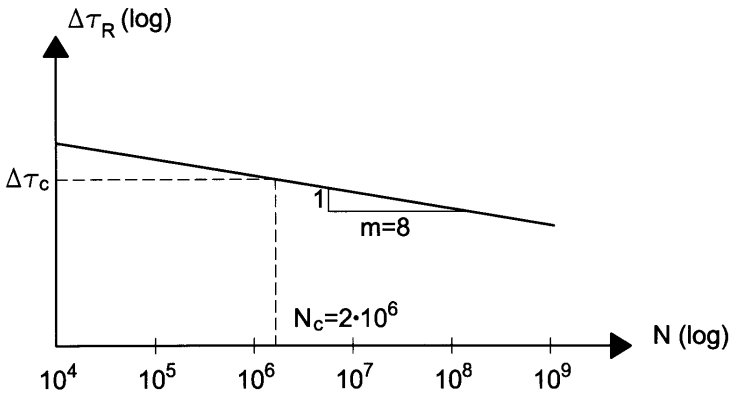

Figure 6.25 : Fatigue strength curve for headed studs in solid slabs

(4) For studs in lightweight concrete with a density class according to EN 1992-1-1, 11, the fatigue strength should be determined in accordance with (3) but with $\Delta\tau_R$ replaced by $\eta_E\Delta\tau_R$ and $\Delta\tau_c$ replaced by $\eta_E\Delta\tau_c$, where η_E is given in EN 1992-1-1, 11.3.2.

6.8.4 Internal forces and fatigue loadings

(1) Internal forces and moments should be determined by elastic global analysis of the structure in accordance with 5.4.1 and 5.4.2 and for the combination of actions given in EN 1992-1-1, 6.8.3.

(2) The maximum and minimum internal bending moments and/or internal forces resulting from the load combination according to (1) are defined as $M_{Ed,max,f}$ and $M_{Ed,min,f}$.

(3) Fatigue loading should be obtained from EN 1991-2. Where no fatigue loading is specified, Annex A.1 of EN 1993-1-9 may be used.

(4) For road bridges simplified methods according to EN 1992-2 and EN 1993-2, based on Fatigue Load Model 3 of clause 4.6 of EN 1991-2 may be used for verifications of fatigue resistance.

(5) For road bridges prestressed by tendons and/or imposed deformations, the factored load model according to clause N2.1 of EN 1992-2 should be used for the verification of reinforcement and tendons.

(6) For railway bridges the characteristic values for load model 71 according to EN 1991-2 should be used.

6.8.5 Stresses

6.8.5.1 General

(1) The calculation of stresses should be based on 7.2.1.

(2)P For the determination of stresses in cracked regions the effect of tension stiffening of concrete on the stresses in reinforcement shall be taken into account.

(3) Unless verified by a more accurate method, the effect of tension stiffening on the stresses in reinforcement may be taken into account according to 6.8.5.4.

(4) Unless a more accurate method is used, for the determination of stresses in structural steel the effect of tension stiffening may be neglected.

(5) The effect of tension stiffening on the stresses in prestressing steel should be taken into account. Clause 6.8.5.6 may be used.

6.8.5.2 Concrete

(1) For the determination of stresses in concrete elements EN 1992-1-1, 6.8 applies

6.8.5.3 Structural steel

(1) Where the bending moments $M_{Ed,max,f}$ and $M_{Ed,min,f}$ cause tensile stresses in the concrete slab, the stresses in structural steel for these bending moments may be determined based on the second moment of area I_2 according to 1.5.2.12

(2) Where $M_{Ed,min,f}$ and $M_{Ed,max,f}$ or only $M_{Ed,min,f}$ cause compression in the concrete slab, the stresses in structural steel for these bending moments should be determined with the cross-section properties of the un-cracked section.

6.8.5.4 Reinforcement

(1) Where the bending moment $M_{Ed,max,f}$ causes tensile stresses in the concrete slab and where no more accurate method is used, the effects of tension stiffening of concrete on the stress $\sigma_{s,max,f}$ in reinforcement due to $M_{Ed,max,f}$ should be determined from the equations (7.4) to (7.6) in 7.4.3 (3). In equation (7.5) in 7.4.3(3), a factor 0.2 should be used, in place of the factor 0.4.

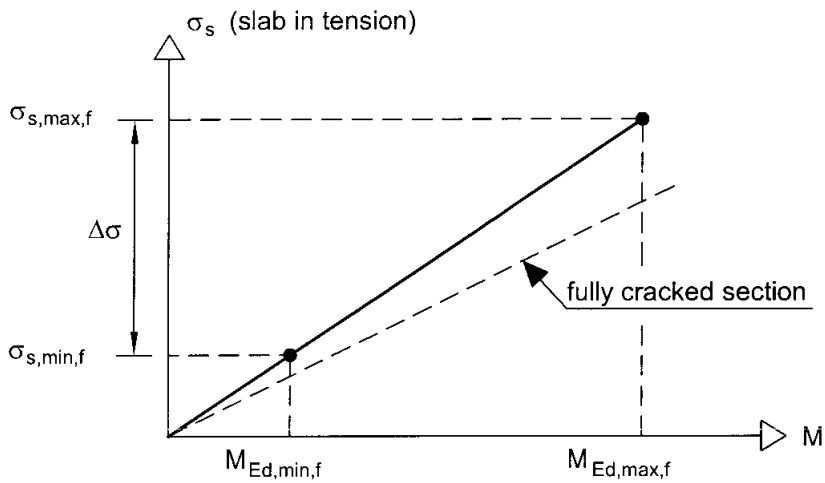

Figure 6.26: Determination of the stresses $\sigma_{s,max,f}$ and $\sigma_{s,min,f}$ in cracked regions

(2) Where also the bending moment $M_{Ed,min,f}$ causes tensile stress in the concrete slab the stress range $\Delta\sigma$ is given by Figure 6.26 and the stress $\sigma_{s,min}$ in reinforcement due to $M_{Ed,min,f}$ can be determined from:

$$\sigma_{s,min,f} = \sigma_{s,max,f} \frac{M_{E,d,min,f}}{M_{Ed,max,f}} \tag{6.51}$$

(3) Where $M_{Ed,min,f}$ and $M_{Ed,max,f}$ or only $M_{Ed,min,f}$ cause compression in the concrete slab, the stresses in reinforcement for these bending moments should be determined with the cross-section properties of the un-cracked section.

6.8.5.5 Shear Connection

(1)P The longitudinal shear per unit length shall be calculated by elastic analysis.

(2) In members where cracking of concrete occurs the effects of tension stiffening should be taken into account by an appropriate model. For simplification, the longitudinal shear forces at the interface between structural steel and concrete may be determined by using the properties of the un-cracked section.

6.8.5.6 Stresses in reinforcement and prestressing steel in members prestressed by bonded tendons

(1)P For members with bonded tendons the different bond behaviour of reinforcement and tendons shall be take into account for the determination of stresses in reinforcement and tendons

(2) Stresses should be determined in according to 6.8.5.4 but with $\sigma_{s,max,f}$ according to 7.4.3 (4).

6.8.6 Stress ranges

6.8.6.1 Structural steel and reinforcement

(1) The stress ranges should be determined from the stresses determined in accordance with 6.8.5

(2) Where the verification for fatigue is based on damage equivalent stress ranges, in general a range $\Delta\sigma_E$ should be determined from:

$$\Delta\sigma_E = \lambda\,\phi\left|\sigma_{max,f} - \sigma_{min,f}\right| \qquad (6.52)$$

where:

$\sigma_{max,f}$ and $\sigma_{min,f}$	are the maximum and minimum stresses due to 6.8.4 and 6.8.5;
λ	is a damage equivalent factor;
ϕ	is a damage equivalent impact factor.

(3) Where a member is subjected to combined global and local effects the separate effects should be considered. Unless a more precise method is used the equivalent constant amplitude stress due to global effects and local effects should be combined using:

$$\Delta\sigma_E = \lambda_{glob}\,\phi_{glob}\,\Delta\sigma_{E,glob} + \lambda_{loc}\,\phi_{loc}\,\Delta\sigma_{E,loc} \qquad (6.53)$$

in which subscripts "glob" and "loc" refer to global and local effects, respectively.

(4) The damage equivalent factor λ depends on the loading spectrum and the slope of the fatigue strength curve.

(5) The factor λ for structural steel elements is given in EN 1993-2, 9.5.2 for road bridges and in EN1993-2, 9.5.3 for railway bridges.

NOTE: Factors $\lambda = \lambda_s$ for reinforcement and prestressing steel are given in EN 1992-2, NN.2 (Informative) for road bridges and NN.3 (Informative) for railway bridges.

(6) For railway bridges the damage equivalent impact factor ϕ is defined in EN 1991-2, 6.4.5.

(7) For road bridges the damage equivalent impact factor may be taken as equal to 1.0.

6.8.6.2 Shear connection

(1) For verification of stud shear connectors based on nominal stress ranges the equivalent constant range of shear stress $\Delta\tau_{E,2}$ for 2 million cycles is given by:

$$\Delta\tau_{E,2} = \lambda_v \, \Delta\tau \tag{6.54}$$

where:

λ_v is the damage equivalent factor depending on the spectra and the slope m of the fatigue strength curve;

$\Delta\tau$ is the range of shear stress due to fatigue loading, related to the cross-sectional area of the shank of the stud using the nominal diameter d of the shank

(2) The equivalent constant amplitude shear stress range in welds of other types of shear connection should be calculated in accordance with EN 1993-1-9, 6.

(3) For bridges the damage equivalent factor λ_V for headed studs in shear should be determined from

$$\lambda_v = \lambda_{v,1} \; \lambda_{v,2} \; \lambda_{v,3} \; \lambda_{v,4} \tag{6.55}$$

where the factors $\lambda_{v,1}$ to$\lambda_{v,4}$ are defined in (4) and (5).

(4) For road bridges of span up to 100 m the factor $\lambda_{v,1}$=1,55 should be used. The factors $\lambda_{v,2}$ to $\lambda_{v,4}$ should be determined in accordance with 9.5.2 (4) to (7) of EN 1993-2 but using exponents 8 and 1/8 in place of those given, to allow for the relevant slope m = 8 of the fatigue strength curve for headed studs, given in 6.8.3.

(5) For railway bridges the factor $\lambda_{v,1}$ should be taken from Figure 6.27.

NOTE: The factors $\lambda_{v,2}$ to $\lambda_{v,4}$ may be determined in accordance with EN 1992-2, NN3.1(104) to (106), but using the exponent m = 8 for headed studs instead of the exponent k_2.

6.8.7 Fatigue assessment based on nominal stress ranges

6.8.7.1 Structural steel, reinforcement and concrete

(1) The fatigue assessment for reinforcement should follow EN 1992-1, 6.8.5 or 6.8.6

(2) The verification for concrete in compression should follow EN 1992-1, 6.8.7.

(3) For bridges the fatigue assessment for structural steel should comply with Section 9 of EN 1993-2.

(3) The fatigue assessment for prestressing steel should comply with EN 1992-1-1, 6.8.5.

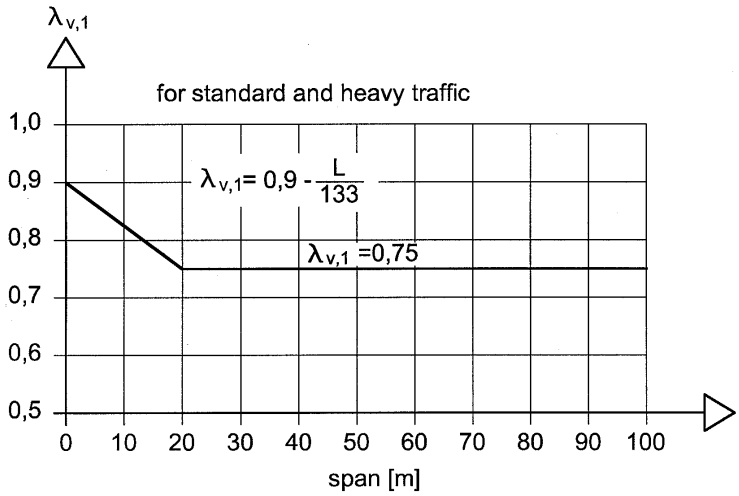

Figure 6.27: Values $\lambda_{v,1}$ for load model 71 according to EN 1991-3:200X

6.8.7.2 Shear connection

(1) For stud connectors welded to a steel flange that is always in compression under the relevant combination of actions (see 6.8.4 (1)), the fatigue assessment should be made by checking the criterion:

$$\gamma_{Ff}\, \Delta\tau_{E,2} \leq \Delta\tau_c / \gamma_{Mf,s} \qquad (6.56)$$

where:

$\Delta\tau_{E,2}$ is defined in 6.8.6.2(1);

$\Delta\tau_c$ is the reference value of fatigue strength at 2 million cycles determined in accordance with 6.8.3.

The stress range $\Delta\tau$ in the stud should be determined with the cross-sectional area of the shank of the stud using the nominal diameter d of the shank.

(2) Where the maximum stress in the steel flange to which stud connectors are welded is tensile under the relevant combination, the interaction at any cross-section between shear stress range $\Delta\tau_E$ in the weld of stud connectors and the normal stress range $\Delta\sigma_E$ in the steel flange should be verified using the following interaction expressions.

$$\frac{\gamma_{Ff}\, \Delta\sigma_{E,2}}{\Delta\sigma_c / \gamma_{Mf}} + \frac{\gamma_{Ff}\, \Delta\tau_{E,2}}{\Delta\tau_c / \gamma_{Mf,s}} \leq 1.3 \qquad (6.57)$$

$$\frac{\gamma_{Ff}\, \Delta\sigma_{E,2}}{\Delta\sigma_c / \gamma_{Mf}} \leq 1.0 \qquad \frac{\gamma_{Ff}\, \Delta\tau_{E,2}}{\Delta\tau_c / \gamma_{Mf,s}} \leq 1.0 \qquad (6.58)$$

where:

$\Delta\sigma_{E,2}$ is the stress range in the flange determined in accordance with 6.8.6.1;

$\Delta\sigma_c$ is the reference value of fatigue strength given in EN1993-1-9, 7, by applying category 80

and the stress ranges $\Delta\tau_{E,2}$ and $\Delta\tau_c$ are defined in (1).

Expression (6.57) should be checked for the maximum value of $\Delta\sigma_{E,2}$ and the corresponding value $\Delta\tau_{E,2}$, as well as for the combination of the maximum value of $\Delta\tau_{E,2}$ and the corresponding value of $\Delta\sigma_{E,2}$. Unless taking into account the effect of tension stiffening of concrete by more accurate methods, the interaction criterion should be verified with the corresponding stress ranges determined with both cracked and un-cracked cross-sectional properties.

6.9 Tension members in composite bridges

(1) An isolated reinforced concrete tension member according to 5.4.2.8 (1) (a) should be designed in accordance with Sections 6 and 9 of EN 1992-1-1. For prestressing by tendons the effect of different bond behaviour of prestressing and reinforcing steel should be taken into account according to 6.8.2 of EN 1992-1-1.

(2) For tension members in half-through bridges or bowstring arch bridges where the tension member is simultaneously acting as a deck and is subjected to combined global and local effects, the design shear resistance for local vertical shear and for punching shear due to permanent loads and traffic loads should be verified. Unless a more precise method is used, the verification should be according to 6.2 and 6.4 of EN 1992-1-1 by taking into account the normal force of the reinforced concrete element according to 5.4.2.8(3) and (6).

(3) At the ends of a concrete part of a composite tension member, for the introduction of the normal force, a concentrated group of shear connectors designed according to 6.6 should be provided. The shear connection should be able to transfer the design value of the normal force of the concrete tension element over a length 1.5 *b*, where *b* is the larger of the outstand of the concrete member and half the distance between adjacent steel elements. Where the shear connectors are verified for a normal force determined by 5.4.2.8(6), equation (5.6-3) should be used.

(4)P Provision shall be made for internal forces and moments from members connected to the ends of a composite tension member to be distributed between the structural steel and reinforced concrete elements.

(5) For composite tension members subject to tension and bending a shear connection should be provided according to 6.6.

(6) For composite tension members such as diagonals in trusses, the introduction length for the shear force should not be assumed in calculation to exceed twice the minimum transverse dimension of the member.

Section 7 Serviceability limit states

7.1 General

(1)P A structure with composite members shall be designed and constructed such that all relevant serviceability limit states are satisfied according to the Principles of 3.4 of EN 1990.

(2) The verification of serviceability limit states should be based on the criteria given in EN 1990, 3.4(3).

(3) The composite bridge or specific parts of it should be classified into environmental classes according to Table 4.1 of EN 1992-1-1 and EN 1992-2, 4.2.

(4) For bridges or parts of bridges, verifications for serviceability limit states should be performed for both the construction phases and for the persistent situations.

(5) Where relevant, requirements and criteria given in A2.4 of Annex A2 of EN 1990 should be taken into account.

(6) Serviceability limit states for composite plates should be verified in accordance with Section 9.

7.2 Stresses

7.2.1 General

(1)P Calculation of stresses for beams at the serviceability limit state shall take into account the following effects, where relevant:

- shear lag;
- creep and shrinkage of concrete;
- cracking of concrete and tension stiffening of concrete;
- sequence of construction;
- increased flexibility resulting from significant incomplete interaction due to slip of shear connection;
- inelastic behaviour of steel and reinforcement, if any;
- torsional and distorsional warping, if any.

(2) Shear lag may be taken into account according to 5.4.1.2.

(3) Unless a more accurate method is used, effects of creep and shrinkage may be taken into account by use of modular ratios according to 5.4.2.2.

(4) In cracked sections the primary effects of shrinkage may be neglected when verifying stresses.

(5)P In section analysis the tensile strength of concrete shall be neglected.

(6) The influence of tension stiffening of concrete between cracks on stresses in reinforcement and pre-stressing steel should be taken into account. Unless more accurate methods are used, the stresses in reinforcement should be determined according to 7.4.3.

(7) The influences of tension stiffening on stresses in structural steel may be neglected.

(8) Stresses in the concrete slab and its reinforcement caused by simultaneous global and local actions should be added.

7.2.2 Stress limitation for bridges

(1)P Excessive creep and microcracking shall be avoided by limiting the compressive stress in concrete.

(2) Stress limitation for concrete to the value $k_i f_{ck}$ should be in accordance with EN 1991-1-1, 7.2.

(3)P The stress in reinforcing steel and in prestressing tendons shall be such that inelastic strains in the steel are avoided.

(4) Under the characteristic combination of actions the stresses should be limited to $k_i f_{sk}$ in reinforcing steel and to $k_5 f_{pk}$ in tendons, where the values k_i and k_5 are given in EN 1992-1-1, 7.2(5).

(5) The stresses in structural steel should be in accordance with EN 1993-2, 7.3.

(6) For serviceability limit states the longitudinal shear force per connector should be limited according to 6.8.1 (3).

7.2.3 Web breathing

(1) The slenderness of unstiffened or stiffened web plates of composite girders should be limited according to 7.4 of EN 1993-2.

7.3 Deformations in bridges

7.3.1 Deflections

(1) For the limit state of deformation EN 1990, A2.4 of Annex A2 and EN 1993-2, 7.5 to 7.8 and 7.12 apply, where relevant.

(2) Deflections should be calculated using elastic analysis in accordance with Section 5.

(3) Deformations during construction should be controlled such that the concrete is not impaired during its placing and setting by uncontrolled displacements and the required long-term geometry is achieved.

7.3.2 Vibrations

(1) For the limit state of vibration see EN 1990, A2-4 of Annex A2, EN 1991-2, 5.7 and 6.4 and EN 1993-2, 7.7 to 7.10 where relevant.

7.4 Cracking of concrete

7.4.1 General

(1) For the limitation of crack width, the general considerations of EN 1992-1-1, 7.3.1(1) - (9) apply to composite structures. The limitation of crack width depends on the exposure classes according to EN 1992-1-l, 4.

(2) An estimation of crack width can be obtained from EN 1992-1-1, 7.3.4, where the stress σ_s should be calculated by taking into account the effects of tension stiffening. Unless a more precise method is used, σ_s may be determined according to 7.4.3(3).

(3) As a simplified and conservative alternative, crack width limitation to acceptable width can be achieved by ensuring a minimum reinforcement defined in 7.4.2, and bar spacing or diameters not exceeding the limits defined in 7.4.3.

(4) Application rules for the limitation of crack widths to w_k are given in 7.4.2 and 7.4.3.

NOTE: The values of w_k and the combination of actions may be found in the National Annex. The recommended values for relevant exposure classes are as given (as w_{max}) in the Note to EN 1992-2, 7.3.1(105)

(5) Where composite action becomes effective as concrete hardens, effects of heat of hydration of cement and corresponding thermal shrinkage should be taken into account only during the construction stage for the serviceability limit state to define areas where tension is expected.

(6) Unless specific measures are taken to limit the effects of heat of hydration of cement, for simplification a constant temperature difference between the concrete section and the steel section (concrete cooler) should be assumed for the determination of the cracked regions according to 7.4.2 (5) and for limitation of crack width according to 7.4.2 and 7.4.3. For the determination of stresses in concrete the short term modulus should be used.

NOTE: The National Annex may give specific measures and a temperature difference. The recommended value for the temperature difference is 20K.

7.4.2 Minimum reinforcement

(1) Unless a more accurate method is used in accordance with EN 1992-1-1, 7.3.2(1), in all sections without pre-stressing by tendons and subjected to significant tension due to restraint of imposed deformations (e.g. primary and secondary effects of shrinkage), in combination or not with effects of direct loading the required minimum reinforcement area A_s for the slabs of composite beams is given by:

$$A_s = k_s k_c k f_{ct,eff} A_{ct} / \sigma_s \tag{7.1}$$

where :

$f_{ct,eff}$ is the mean value of the tensile strength of the concrete effective at the time when cracks may first be expected to occur. Values of $f_{ct,eff}$ may be taken as those for f_{ctm}, see EN 1992-1-1, Table 3.1, or as f_{lctm}, see Table 11.3.1, as appropriate, taking as the class the strength at the time cracking is expected to occur. When the age of the concrete at cracking cannot be established with confidence as being less than 28 days, a minimum tensile strength of 3 N/mm^2 may be adopted;

k is a coefficient which allows for the effect of non-uniform self-equilibrating stresses which may be taken as 0.8;

k_s is a coefficient which allows for the effect of the reduction of the normal force of the concrete slab due to initial cracking and local slip of the shear connection, which may be taken as 0.9;

k_c is a coefficient which takes account of the stress distribution within the section immediately prior to cracking and is given by:

$$k_c = \frac{1}{1 + h_c / (2 z_o)} + 0.3 \leq 1.0 \tag{7.2}$$

h_c is the thickness of the concrete flange, excluding any haunch or ribs;

z_o is the vertical distance between the centroids of the un-cracked concrete flange and the un-cracked composite section, calculated using the modular ratio n_0 for short-term loading;

σ_s is the maximum stress permitted in the reinforcement immediately after cracking. This may be taken as its characteristic yield strength f_{sk}. A lower value, depending on the bar size, may however be needed to satisfy the required crack width limits. This value is given in Table 7.1;

A_{ct} is the area of the tensile zone (caused by direct loading and primary effects of shrinkage) immediately prior to cracking of the cross section. For simplicity the area of the concrete section within the effective width may be used.

Table 7.1 : Maximum bar diameters for high bond bars

Steel stress σ_s (N/mm^2)	Maximum bar diameter ϕ^* (mm) for design crack width w_k		
	w_k=0.4mm	w_k=0.3mm	w_k=0.2mm
160	40	32	25
200	32	25	16
240	20	16	12
280	16	12	8
320	12	10	6
360	10	8	5
400	8	6	4
450	6	5	-

(2) The maximum bar diameter for the minimum reinforcement may be modified to a value ϕ given by:

$$\phi = \phi^* f_{ct,eff} / f_{ct,0} \tag{7.3}$$

where:

ϕ^* is the maximum bar size given in Table 7.1;

$f_{ct,0}$ is a reference strength of 2.9 N/mm^2.

(3) At least half of the required minimum reinforcement should be placed between mid-depth of the slab and the face subjected to the greater tensile strain.

(4) For the determination of the minimum reinforcement in concrete flanges with variable depth transverse to the direction of the beam the local depth should be used.

(5) The minimum reinforcement according to (1) and (2) should be placed where the stresses in concrete are tensile under the characteristic combination of actions. For members prestressed by bonded tendons EN 1992-1-1, 7.3.2 (4) applies.

(6) Where bonded tendons are used, the contribution of bonded tendons to minimum reinforcement may be taken into account in accordance with EN 1992-1-1, 7.3.2 (3).

7.4.3 Control of cracking due to direct loading

(1) Where at least the minimum reinforcement given by 7.4.2 is provided, the limitation of crack widths to acceptable values may generally be achieved by limiting bar spacing or bar diameters. Maximum bar diameter and maximum bar spacing depend on the stress σ_s in the reinforcement and the design crack width. Maximum bar diameters are given in Table 7.1 and maximum bar spacing in Table 7.2.

Table 7.2 Maximum bar spacing for high bond bars

Steel stress σ_s (N/mm^2)	Maximum bar spacing (mm) for design crack width w_k		
	w_k=0.4mm	w_k=0.3mm	w_k=0.2mm
160	300	300	200
200	300	250	150
240	250	200	100
280	200	150	50
320	150	100	-
360	100	50	-

(2) The internal forces should be determined by elastic analysis in accordance with Section 5 taking into account the effects of cracking of concrete. The stresses in the reinforcement should be determined taking into account effects of tension stiffening of concrete between cracks. Unless a more precise method is used, the stresses may be calculated according to (3).

(3) In composite beams where the concrete slab is assumed to be cracked and not pre-stressed by tendons, stresses in reinforcement increase due to the effects of tension stiffening of concrete between cracks compared with the stresses based on a composite section neglecting concrete. The tensile stress in reinforcement σ_s due to direct loading may be calculated from:

$$\sigma_s = \sigma_{s,o} + \Delta\sigma_s \tag{7.4}$$

with:

$$\Delta\sigma_s = \frac{0.4\, f_{ctm}}{\alpha_{st}\ \rho_s} \tag{7.5}$$

$$\alpha_{st} = \frac{A\, I}{A_a\, I_a} \tag{7.6}$$

where:

$\sigma_{s,o}$ is the stress in the reinforcement caused by the internal forces acting on the composite section, calculated neglecting concrete in tension;

f_{ctm} is the mean tensile strength of the concrete, for normal concrete taken as f_{ctm} from EN 1992-1-1, Table 3.1 or for lightweight concrete as f_{lctm} from Table 11.3.1;

ρ_s is the reinforcement ratio, given by $\rho_s = (A_s / A_{ct})$;

A_{ct} is the effective area of the concrete flange within the tensile zone; for simplicity the area of the concrete section within the effective width should be used;

A_s is the total area of all layers of longitudinal reinforcement within the effective area A_{ct} ;

A, I are area and second moment of area, respectively, of the effective composite section neglecting concrete in tension and profiled sheeting, if any;

A_a, I_a are the corresponding properties of the structural steel section.

(4) Where bonded tendons are used, design should follow EN 1992-1-1, 7.3, where σ_s should be determined taking into account tension stiffening effects.

7.5 Filler beam decks

7.5.1 General

(1) The action effects for the serviceability limit states should be determined according to paragraphs 1 to 4 and 6 to 8 of 5.4.2.9.

7.5.2 Cracking of concrete

(1) The application rules of 7.4.1 should be considered.

(2) For the reinforcing bars in the direction of the steel beams within the whole thickness of the deck, 7.5.3 and 7.5.4 should be applied.

7.5.3 Minimum reinforcement

(1) Unless verified by more accurate methods according to EN 1992-2, 7.3.2, the minimum longitudinal top reinforcement $A_{s,min}$ per filler beam should be determined as follows:

$$A_{s,min} \geq 0.01\ A_{c,eff} \qquad (7.7)$$

where

A_{ceff}	is the effective area of concrete given by $A_{c,eff} = s_w\ c_{st} \leq s_w\ d_{eff}$
d_{eff}	is the effective thickness of the concrete given by $d_{eff} = c + 7.5\ \phi_s$
ϕ_s	is the diameter of the longitudinal reinforcement in [mm] within the range $10\text{mm} \leq \phi_s \leq 16\text{mm}$
c, c_{st}	is the concrete cover of the longitudinal reinforcement and the structural steel section (see Figure 6.8)
s_w	is defined in Figure 6.8

The bar spacing s of the longitudinal reinforcement should fulfil the following condition $100\ \text{mm} \leq s \leq 150\ \text{mm}$

7.5.4 Control of cracking due to direct loading

(1) Clause 7.4.3 (1) is applicable

(2) The stresses in the reinforcement may be calculated by using the cross-section properties of the cracked composite section with the second moment of area I_2 according to 1.5.2.12.

Section 8 Precast concrete slabs in composite bridges

8.1 General

(1) This Section 8 deals with reinforced or prestressed precast concrete slabs, used either as full depth flanges of bridge decks or as partial depth slabs acting with insitu concrete.

(2) Precast bridge slabs should be designed in accordance with EN 1992 and also for composite action with the steel beam.

(3) Relevant tolerances should be in accordance with EN 1992 unless more strict tolerances are required for the specific project.

8.2 Actions

(1) EN 1991-6 is applicable to precast elements acting as permanent formwork. The requirements are not necessarily sufficient and the requirements of the construction method should also be taken into account.

8.3 Design, analysis and detailing of the bridge slab

(1) Where it is assumed that the precast slab acts with insitu concrete, they should be designed as continuous in both the longitudinal and the transverse directions. The joints between slabs should be designed to transmit in-plane forces as well as bending moments and shears. Compression perpendicular to the joint may be assumed to be transmitted by contact pressure if the joint is filled with mortar or glue or if it is shown by tests that the mating surfaces are in sufficiently close contact.

(2) For the use of stud connectors in groups, see 6.6.5.5(3).

(3) A stepped distribution of shear forces may be used provided that the limitations in 6.6.1.2(1) are observed.

8.4 Interface between steel beam and concrete slab

8.4.1 Bedding and tolerances

(1) Where precast slabs without bedding are used, the special requirements for the tolerances of the supporting steel work should be specified.

8.4.2 Corrosion

(1) A steel flange under precast slabs without bedding should have the same corrosion protection as the rest of the steelwork but for a top coating provided after erection. Bedding with the purpose of protecting against corrosion may be designed to be not loadbearing.

8.4.3 Shear connection and transverse reinforcement

(1) The shear connection and transverse reinforcement should be designed in accordance with the relevant clauses of Section 6 and 7.

(2) If shear connectors welded to the steel beam project into recesses within slabs or joints between slabs, which are filled with concrete after erection, the detailing and the properties of the concrete (e.g. size of the aggregate) should be such that it can be cast properly. The clear distance between the shear connectors and the precast element should be sufficient in all directions to allow for full compaction of the filling material taking account of tolerances.

(3) If shear connectors are arranged in groups, reinforcement should be provided near each group to prevent premature local failure in either the precast or the insitu concrete.

NOTE: The National Annex may refer to relevant information

Section 9 Composite plates in bridges

9.1 General

(1) This Section 9 is valid for composite plates consisting of a nominally flat plate of structural steel connected to a site cast concrete slab by headed studs for the use as a flange in a bridge deck carrying transverse loads as well as in-plane forces, or as a bottom flange in a box girder. Double skin plates or other types of connectors are not covered.

(2) The steel plate should be supported during casting either permanently or by temporary supports in order to limit its deflection to less than 0,05 times the slab thickness unless the additional weight of concrete due to the deflection of the plate is taken into account in the design of the steel plate.

(3) The effective width should be determined according to 5.4.1.2, where b_0 should be taken as $2a_w$ with a_w as defined in 9.4(4).

(4) For global analysis, 5.1 and 5.4 apply.

9.2 Design for local effects

(1) Local effects are bending moments and shears caused by transverse loads on the plate acting as a one- or two-way slab. For the purpose of analysis of local action effects the slab may be assumed to be elastic and uncracked. A top flange of an I-girder need not be designed as composite in the transverse direction.

(2) The concrete and the steel plate may be assumed to act compositely without slip.

(3) The resistance to bending and vertical shear force may be verified as for a reinforced concrete slab where the steel plate is considered as reinforcement. The design resistance for vertical shear in 6.2.2.5(3) is applicable, where the distance, in longitudinal and transverse direction, between shear connectors does not exceed three times the thickness of the slab.

9.3 Design for global effects

(1)P The composite plate shall be designed to resist all forces from axial loads and global bending and torsion of all longitudinal girders or cross-girders of which it forms a part.

(2) The design resistance to in-plane compression may be taken as the sum of the design resistances of the concrete and the steel plate within the effective width. Reduction in strength due to second order effects should be considered according to 5.8 of EN 1992-1-1.

(3) The design resistance for tension should be taken as the sum of the design resistances of the steel plate and the reinforcement within the effective width.

(4) Interaction with local load effects should be considered for the shear connectors as stated in 9.4(1)P. Otherwise it need not be considered. Connectors design for shear forces in both the longitudinal and transverse directions should be verified for the vector sum of the simultaneous forces on the connector.

9.4 Design of shear connectors

(1)P Resistance to fatigue and requirements for serviceability limit states shall be verified for the combined local and simultaneous global effect.

(2) The design strength of stud connectors in 6.6.3 and 6.8.3 may be used provided that the concrete slab has bottom reinforcement with area not less than 0.002 times the concrete area in each of two perpendicular directions.

(3) The detailing rules of 6.6.5 are applicable.

(4) For wide girder flanges the distribution of longitudinal shear due to global effects for serviceability and fatigue limit states may be determined as follows in order to account for slip and shear lag. The longitudinal force P_{Ed} on a connector at distance x from the nearest web may be taken as

$$P_{Ed} = \frac{v_{L,Ed}}{n_{tot}} \left[\left(3.85 \left(\frac{n_w}{n_{tot}} \right)^{-0,17} - 3 \right) \left(1 - \frac{x}{b} \right)^2 + 0.15 \right] \tag{9.1}$$

where

$v_{L,Ed}$ is the design longitudinal shear per unit length due to global effects at the point x=0,

n_{tot} is the total number of connectors of the same size per unit length of girder within the width b in Figure 9.1, provided that the number of connectors per unit area does not increase with x,

n_w is the number of connectors per unit length placed within a distance from the web equal to the larger of $10t_f$ and 200 mm, where t_f is the thickness of the steel plate. For these connectors x should be taken as 0,

b is equal to half the distance between adjacent webs or the distance between the web and the free edge of the flange.

In case of a flange projecting distance a_w outside the web according to Fig. 9.1, the number of connectors n and n_w may include connectors placed on this flange. Shear connectors should be concentrated in the region for n_w according Fig. 9.1. The spacing of the connectors should fulfill the conditions in (7) to avoid premature local buckling of the plate.

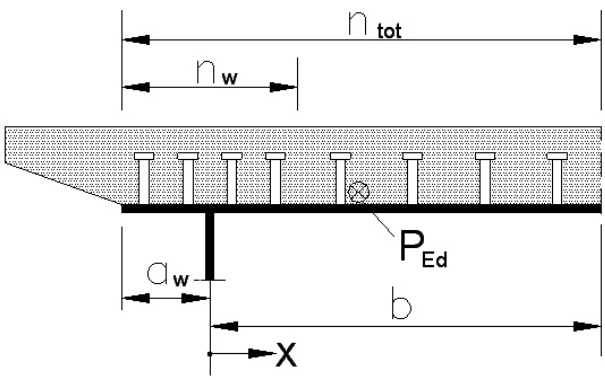

Figure 9.1: Definition of notations in equation (9.1)

(5) A More accurate determination of the distribution of longitudinal shear forces in composite bottom flanges of box sections according to (4) is not required, if the arrangement of the shear connectors is based on the following rules:

- Shear connectors should be concentrated in the corners of the box girder;
- At least 50% of the total amount of shear connectors, which are responsible for the transfer of the longitudinal shear force in the bottom concrete flange should be placed within the width b_f of the bottom steel flange and the width b_w of the web of the box girder. The width b_f of the steel bottom flange should be taken as the largest of

$$b_f = 20\, t_f\,, \quad b_f = 0.2 b_{ei} \quad \text{and} \quad b_f = 400 \text{ mm}$$

where b_{ei} is the effective width of the lower flange according to 5.4.1.2 and t_f the thickness of the steel bottom flange.

(6) For ultimate limit states it may be assumed that all connectors within the effective width carry the same longitudinal force.

(7) Where restraint from shear connectors is relied upon to prevent local buckling of the steel element of a composite plate in compression, the centre-to-centre spacings of the connectors should not exceed the limits given in Table 9.1.

Table 9.1: Upper limits to spacings of shear connectors in a composite plate in compression

		Class 2	Class 3
Transverse to the direction of compressive stress	outstand flange:	14 $t\varepsilon$	20 $t\varepsilon$
	interior flange:	45 $t\varepsilon$	50 $t\varepsilon$
In the direction of compressive stress	outstand and interior flanges:	22 $t\varepsilon$	25 $t\varepsilon$
$\varepsilon = \sqrt{235 / f_y}$,with f_y in N/mm^2 t – thickness of the steel flange			

Annex C
(Informative)
Headed studs that cause splitting forces in the direction of the slab thickness

C.1 Design resistance and detailing

(1) The design shear resistance of a headed stud according to 6.6.3.1, that causes splitting forces in the direction of the slab thickness, see Figure C.1, should be determined for ultimate limit states other than fatigue from equation (C.1), if this leads to a smaller value than that from equations (6.18) and (6.19):

$$P_{\mathrm{Rd,L}} = \frac{1.4\ k_{\mathrm{v}}\ (f_{\mathrm{ck}}\ d\ a_r')^{0,4}\ (a/s)^{0,3}}{\gamma_{\mathrm{V}}} \quad [\mathrm{kN}] \qquad \text{(C.1)}$$

where:

a_r' is the effective edge distance; $= a_r - c_v - \phi_s / 2 \ \geq 50$ mm;

k_V = 1 for shear connection in an edge position,

= 1.14 for shear connection in a middle position;

γ_V is a partial factor;

NOTE: See the Note to 6.6.3.1(1) for γ_V

f_{ck} is the characteristic cylinder strength of the concrete at the age considered, in N/mm^2;

d is the diameter of the shank of the stud with $19 \leq d \leq 25$ mm;

h is the overall height of the headed stud with $h/d \geq 4$;

a is the horizontal spacing of studs with $110 \leq a \leq 440$ mm;

s is the spacing of stirrups with both $a/2 \leq s \leq a$ and $s/a_r' \leq 3$;

ϕ_s is the diameter of the stirrups with $\phi_s \geq 8$ mm;

ϕ_ℓ is the diameter of the longitudinal reinforcement with $\phi_\ell \geq 10$ mm;

c_v is the vertical concrete cover according to Fig. C.1 in [mm].

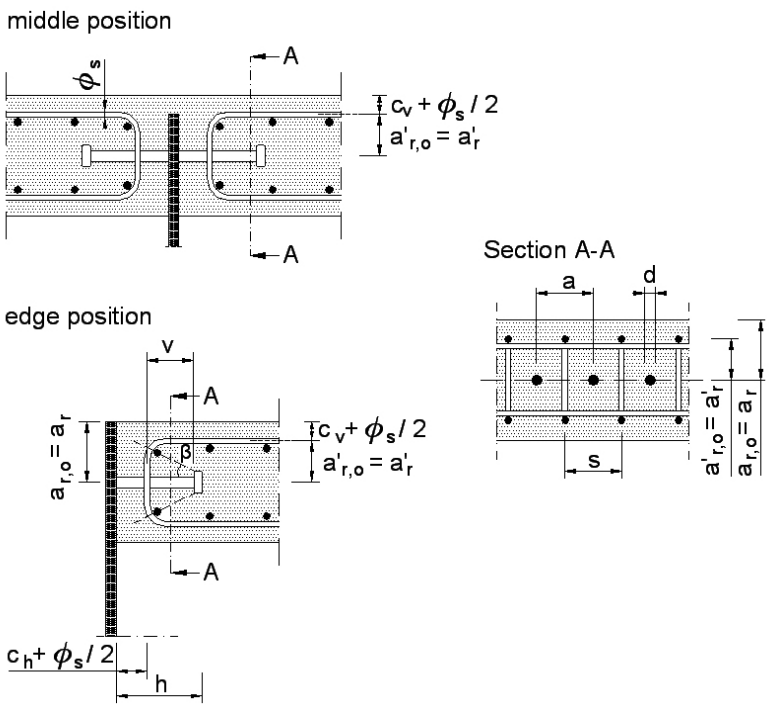

Figure C.1: Position and geometrical parameters of shear connections with horizontally arranged studs

(2) A failure by pull-out of the stud at the edge of the slab should be prevented by fulfilling the following conditions:

uncracked concrete: $\beta \leq 30°$ or $v \geq \max\{110\text{ mm}; 1.7\, a_r'; 1.7\, s/2\}$
cracked concrete: $\beta \leq 23°$ or $v \geq \max\{160\text{ mm}; 2.4\, a_r'; 2.4\, s/2\}$

with v as shown in Figure C.1.

(3) The splitting force in direction of the slab thickness should be resisted by stirrups, which should be designed for a tensile force according the following equation:

$$T_d = 0.3\, P_{Rd,L} \tag{C.2}$$

(4) The influence of vertical shear on the design resistance of a stud connector due to vertical support of the slab should be considered. The interaction may be verified by the following equation:

$$\left(\frac{F_{d,L}}{P_{Rd,L}}\right)^{1,2} + \left(\frac{F_{d,V}}{P_{Rd,V}}\right)^{1,2} \leq 1 \tag{C.3}$$

with

$$P_{Rd,V} = \frac{0.012\ (f_{ck}\ \phi_\ell)^{0,5}\,(d\ a/s)^{0,4}\ (\phi_s)^{0,3}\ (a'_{r,o})^{0,7}\,k_v}{\gamma_V} \quad [\text{kN}] \tag{C.4}$$

where $a_{r,o}'$ is the effective upper edge distance $= a_{r,o} - c_v - \phi_S / 2 \geq 50$ mm. Beside the design requirements given in C.1(1) the following conditions should be satisfied:

$h \geq 100$ mm; $110 \leq a \leq 250$ mm; $\phi_S \leq 12$ mm; $\phi_\ell \leq 16$ mm.

C.2 Fatigue strength

(1) The fatigue strength curve of headed studs causing splitting forces in the direction of the slab thickness according to C.1(1) is given for normal-weight concrete by

$$(\Delta P_R)^m\, N = (\Delta P_c)^m\, N_c \tag{C.5}$$

where:

ΔP_R is the fatigue strength based on difference of longitudinal shear force per stud;

ΔP_c is the reference value of fatigue strength at $N_c = 2 \times 10^6$ according to Table C.1.

m is the slope of the fatigue strength curve with $m = 8$;

N is the number of force range cycles.

In Table C.1 a_r' is the effective edge distance according Figure C.1 and clause C.1(1).

Table C.1: Fatigue strength ΔP_c for horizontally arranged studs

a_r'	[mm]	50	≥ 100	**NOTE:**	For $50 < a_r' < 100$ mm ΔP_c should be determined by linear interpolation.
ΔP_c	[kN]	24.9	35.6		

(2) For the maximum longitudinal shear force per connector 6.8.1(3) applies.