CHAPTER 6

COMPACTION

Introduction

The last aspect of the hot mix asphalt (HMA) construction process is compaction. Compaction is the process by which freshly placed HMA is compressed to reduce the in-place air voids and produce a smooth, long lasting pavement. This is a very crucial step in the construction process. Proper and effective compaction is necessary in order to prevent the excessive intrusion of air and water into the pavement structure. Research has shown that when in-place air voids are in excess of 8 percent, the voids tend to be interconnected throughout the pavement. Circulation of air and water (both of which contain oxygen) through a poorly compacted pavement can greatly reduce its longevity and, in extreme cases, cause catastrophic failure (see Figure 6.01). The ability of air and water to move freely through the pavement accelerates the oxidation process and causes "aging," or hardening. This aging leads to more brittle asphalt binders, therefore reducing durability in the pavement. A porous mixture that allows excessive moisture to penetrate promotes rapid aging and raveling of the mixture. If moisture is trapped in the pavement it could lead to stripping. This intrusion of air and water can be greatly reduced—if not eliminated—when the pavement is properly compacted to an in-place air void level of 8 percent or less. Air voids are less likely to be interconnected when pavements are compacted to less than 8 percent air voids.

Some pavements, such as Open Graded Friction Courses, are designed with in-place air void contents as high as 20 percent. These types of mixtures generally consist of a very high quality, coarse aggregate structure coated with a thick asphalt film. This thick asphalt film resists the effects of water and air in the mixture, allowing it to perform under harsh circumstances. These types of mixtures require adjustment in the rolling procedures. Normally, only two or three passes of a static roller are required to "set" the mixture. However, when compacting extremely coarse mixtures, other adjustments must be made and will be discussed in following sections.

Compaction Principles

➤➤General Mechanics of Compaction

The mechanics of compaction involve three main forces at work. They are: the compressive force of the rollers, the resistive forces within the mixture, and the supporting forces exerted by the stable surface beneath the mat, be it subgrade, aggregate base or pavement. Compaction of the HMA will be completed when these three forces reach equilibrium.

Construction of a quality roadway begins from the bottom up. The subgrade (or other stable surface beneath the mat), along with the internal friction of the mixture, resists the downward compaction force of the rollers. The underlying layers must be able to support the forces exerted by the roller in order to overcome the internal resistance of the mixture. If the subgrade is not firm and stable, the HMA will not be confined and compaction will not be achieved (see Figure 6.02). This also applies to the HMA; if it is not stable enough to resist the compaction forces, it will tend to displace and not com-

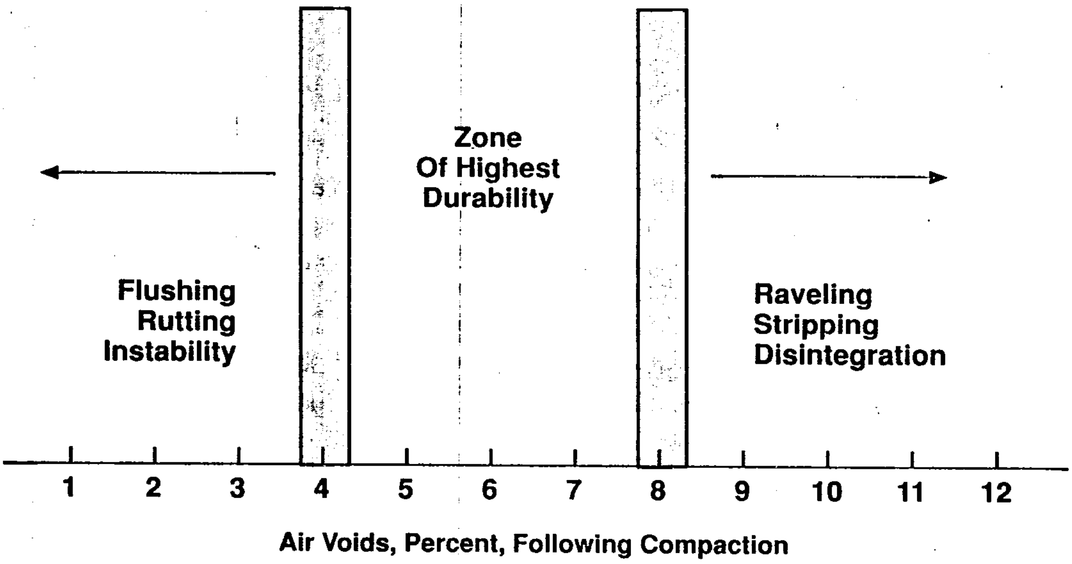

Figure 6.01 Durability Effects vs. In-place Air Voids

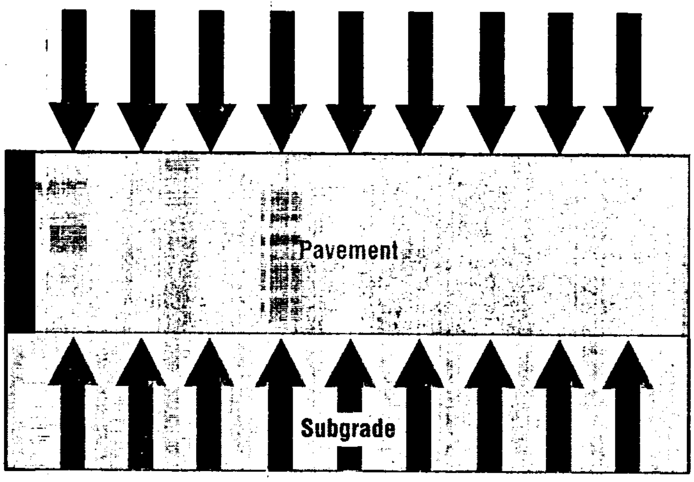

Figure 6.02 Forces at Work During Compaction

pact to the desired air void level. Finally, if the rollers do not exert enough force to overcome resistance within the mixture, the pavement will not be sufficiently compacted. As current and future traffic loading requires harsher mixtures, more compaction effort is needed to overcome the internal resistance of the mixture to reduce the air voids to acceptable levels. Awareness of these reactions is necessary to establish a proper compaction process.

➤➤HMA Factors Affecting Compaction

Internal resistance of the HMA is dependent on:

- Mixture properties and characteristics.
- Environmental conditions.
- Layer (lift) thickness.
- Subgrade and bases.

Each of these factors will be discussed in detail in the following sections.

Mixture Properties and Characteristics Resistance to compaction of the HMA is important in determining the amount of compactive effort that is required to reduce the air voids in the pavement to an acceptable level. There are many variables that determine this level of resistance, including:

- Aggregate properties.
- Asphalt binder properties.
- Temperature.

Aggregate Properties – It is important to remember that HMA is a combination of aggregate and asphalt binder. The aggregate acts as the structural skeleton of the pavement and the asphalt binder as the glue of the mixture. The aggregate used in the mixture greatly affects how the HMA reacts on the roadway. Gradation, surface texture and angularity are the primary characteristics that affect workability of the mixture. As the maximum aggregate size increases or the amount of coarse aggregate increases, the mixture becomes more resistant to compaction. This decreases the workability of the mixture and requires more compactive effort in order to reduce the in-place air voids. An increase in surface texture and angularity also creates the same effect. A crushed, rough surfaced, cubical aggregate provides more particle-to-particle friction than round, smooth, natural aggregate. An excessive amount of natural sands around the 0.60 mm (No. 30) sieve size can yield especially tender mixtures. Crushed aggregates are generally much more stable than natural aggregates; however, when some aggregates are crushed, they fracture into very smooth or flat and elongated particles. These types of aggregates will not provide as much interparticle friction.

The dust content, or material passing the 0.075 mm (No. 200) sieve, will also affect the compaction process. It is the combination of fines and asphalt that provides the binding mastic in HMA pavements. The mixture should contain sufficient fines to combine with the asphalt to produce the necessary cohesion when the mixture cools. The addition of a mineral filler, such as lime, will help to counter tenderness or "slow setting" properties of a mixture that contains too much natural sand. However, if a mixture contains too many fines it may become "gummy" and unworkable.

Asphalt Binder Properties – Asphalt is a thermoplastic, temperature susceptible material. As the temperature of asphalt increases, the viscosity decreases, that is, it gets thinner. As it cools, it gets thicker or more viscous. When the asphalt binder is fluid (hot), it easily mixes and coats the aggregate particles. It also acts as a lubricant that facilitates compaction of the mixture on the roadway. As the asphalt binder cools, it becomes stiffer and binds the aggregates to provide a durable long lasting mixture. For mixtures with neat asphalts, once the temperature of the mixture cools to around 85°C (185°F), the asphalt binder thickens rapidly. Compaction of HMA should be complete before the mixture temperature falls below 85°C (185°F). Continuing to compact can damage the pavement and actually increase the air void level in the mixture.

Superpave specifications may require that premium asphalt binders be used in many areas. These premium binders may require modifiers to achieve the performance desired. Some modified binders have elevated softening points that may require the HMA to be compacted well above 93°C (200°F). It is difficult to predict what the minimum temperature will be. Experience, field testing, and information from the asphalt supplier will provide the best source of knowledge to attain a quality pavement.

Temperature – The temperature of a mixture is perhaps the most important property in obtaining density, since the viscosity of an asphalt binder is controlled by its temperature. The temperature at which HMA is produced is the first controlling factor that will determine the compaction temperature on the roadway. During the initial mixture design, mixing and compaction temperatures are determined from curves on the temperature-viscosity chart. The laboratory mixing temperature is the temperature at which the asphalt binder reaches a viscosity of 0.17 (±0.02 Pa-s 170 ± 20 centi-stokes). The laboratory compaction temperature is that at which the asphalt binder reaches a viscosity of 0.28 ±0.03 Pa-s (280 ± 30 centistokes). These viscosity ranges, however, are not necessarily valid for modified asphalts. The mixing and compacting temperatures obtained are intended for laboratory mix design procedures. Even so, a good starting point for the plant mixture production temperature is the laboratory mixing temperature.

It is not realistic, however, to expect the pavement compaction process to be completed at the laboratory compaction temperature. The laboratory compaction temperature can often approach or exceed 150°C (300°F). Typically, the difference between laboratory mixing and laboratory compaction temperatures is relatively small, in the range of 10°C (18°F). This would not allow sufficient time to load, haul, place and compact the asphalt mixture. However, construction specifications are usually written to require the compaction process to be completed before the in-place temperature of the mixture cools to 85°C (185°F). This should allow enough time for the pavement compaction to be completed.

The same mixing and compaction temperatures may not apply to modified binders in either laboratory mix design or production and compaction. Modified binders may not reach the mixing viscosity of 0.17 ±0.02 Pa-s (170 ± 20 centistokes) until heated to 150°C (350°F) or higher. In addition, modified binders may become stiff well before their temperature drops to 85°C (185°F). When working with these special binders, consultation with the binder manufacturer is essential in determining construction parameters.

In general, mixing temperatures should be kept as low as possible in order to obtain uniform mixing and coating of the aggregate and asphalt, yet high enough to provide field crews sufficient time to place and compact the HMA on the roadway. High performance pavements, with coarse aggregate structures and modified binders, may require that compaction be completed at temperatures well above 93°C (200°F). Close coordination between plant production, temperature, length of haul, time for placement, and compactive effort will be necessary to achieve a properly constructed pavement.

Environmental Conditions The construction of quality pavement structures is highly dependent on the conditions under which the pavement is placed. Ambient air temperature, wind, humidity and the temperature of the surface upon which the HMA is being placed can seriously affect the cooling rate of the mixture. The placement and compaction of HMA is basically a race against time (see Figure 6.03). Cool air temperatures, high humidity, strong winds and cool surfaces can shorten the time in which compaction must take place. Increasing plant mix temperature, covering hauling units, minimizing haul length and shortening windrows in front of pick up machines can all minimize the effects of the environment.

Layer Thickness All asphalt mixtures cool with time. The greater the surface area of the mixture, the faster the environment can cool the mixture. Thick layers, or lifts, have less material exposed to the air and subsurface in relation to their volume, and therefore cool slower. Generally, it is easier to achieve required density in thicker lifts of HMA than in thinner ones. This is because the thicker the mat, the longer it retains heat, thus increasing the time during which compaction can take place. This principle can be used to advantage when rolling lifts of highly stable mixtures that are difficult to compact, or when paving in weather that can cause rapid cooling of thin mats. The most effective way to slow the rate of cooling is to keep the mixture in as large a mass as possible. Thicker layers can permit mixtures to be placed at lower temperatures because of the reduced rate of cooling.

Subgrade and Bases The subgrade or base must be firm and non-yielding under the haul trucks and other construction equipment. Subgrades or bases that show movement under trucks or construction equipment will need additional compaction work or some type of remedial work to overcome the softness. The remedial work could be lime or portland cement stabilization, or in certain circumstances, removal and replacement with a more suitable material. A yielding subgrade or base would require a thicker HMA pavement in order to support the traffic loading. Haul trucks may also be limited in size and weight to prevent pumping action of basement materials.

➤➤*Cold Weather Paving*

As previously discussed, maintaining heat in the mix is critical in achieving density and constructing a quality asphalt pavement. In many areas however, it is necessary to pave when conditions are not exactly favorable. Many times in the early spring or late fall and winter, temperatures can severely hamper or halt the construction process. When paving in cold weather conditions, construction procedures usually need to be altered in order to achieve the specified density. A few things that can be done to achieve density are:

- Work the breakdown and intermediate rollers as close to the paver as possible.
- Cover loads during hauling (warm and cold weather paving).
- Insulate the truck beds.
- Increase the plant temperature.
- Decrease plant production rate.
- Minimize or eliminate windrows and pickup machines.
- Reduce paving speed.
- Increase the number of rollers.
- Increase the layer thickness.

The basic strategy is to maintain as much heat as possible in the mixture long enough to facilitate attainment of the required density. However, even by observing all of the above recommendations and achieving the specified level of compaction, detrimental effects can occur when paving during cold weather. As the HMA cools, it cools at different rates. The exposed surface and the surface contacting the cold subsurface will cool at a much faster rate. The top and bottom of the layer will rapidly cool to the surrounding temperature, while the middle portion of the layer (which is often where the temperature is measured) remains much warmer. It is theorized that, when the lift is compacted, the top surface can develop micro cracks as the mat compresses. These micro cracks allow moisture to enter the pavement surface, and moisture

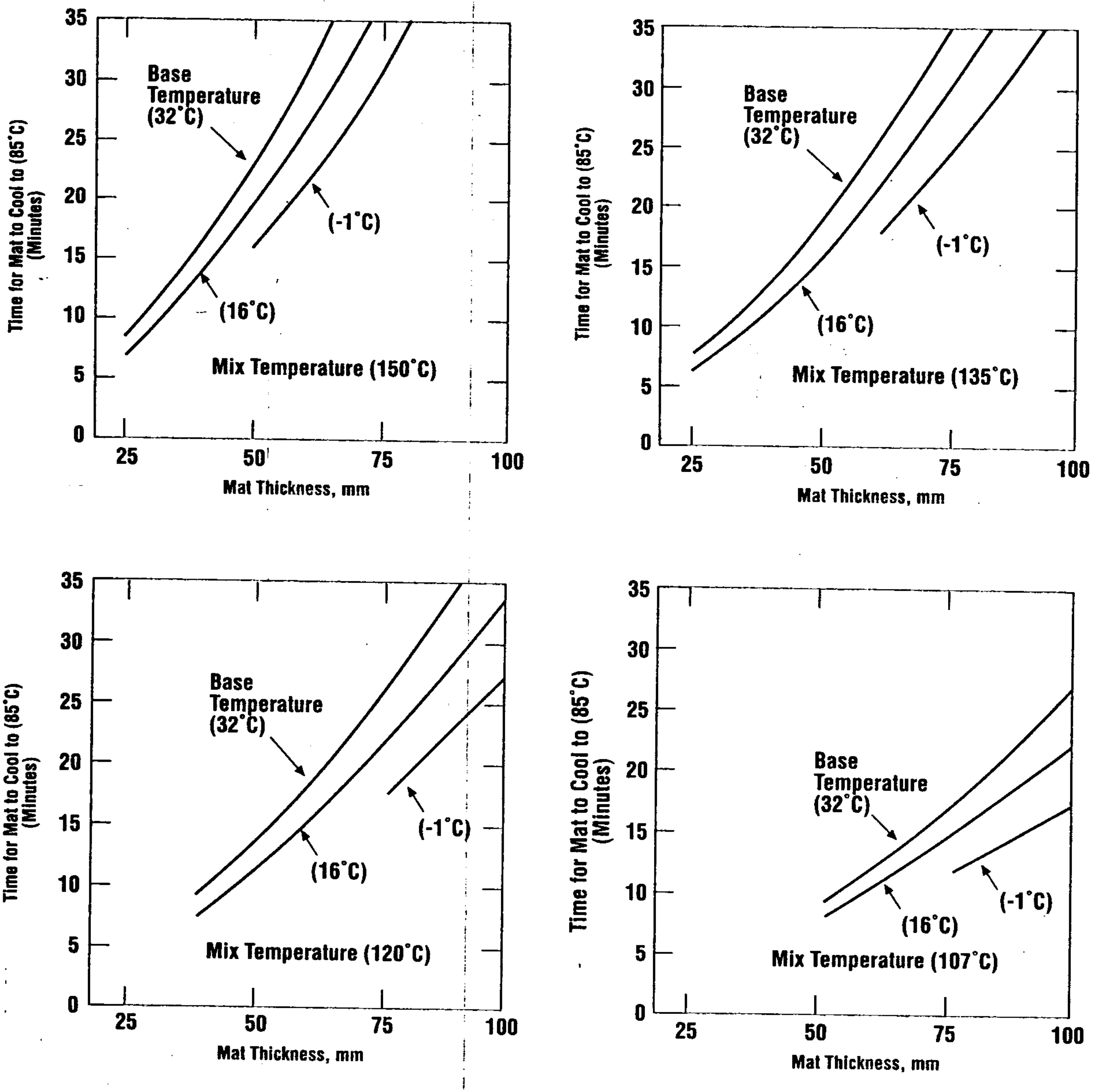

Wind velocity – 10 knots. Atmospheric temperature – same as base.

Note: "Base Temperature" is the temperature of the surface upon which the asphalt mat is placed.

85°C is the temperature of the mat measured 6 to 12 mm below the mat surface. The average temperature of the entire mat thickness when this temperature is reached, is approximately 80°C.

Placing thicknesses less than those shown by the curves is not recommended on sugrades of -1°C (base temperature).

(Conversion: 25.4 mm = 1 in, °F = [(9/5)°C]+32)

Figure 6.03 Time Allowed for Compaction

damage can be expected. As a result, surface raveling could occur. Raveling is the process where surface fines and binder are lost and "flake" away. The resulting surface will appear porous and rocky as the large aggregate remains in place. This phenomenon is more severe when using marginal or "poor" aggregates and when paving in the fall. Early season paving problems tend to be less prevalent since traffic during the summer seems to "knead" the surface back together.

Perhaps the most common consequence of cold weather paving is inadequate densification of the pavement layer, especially thin surface courses. The lack of adequate density in late paving season often results in raveling, and sometimes disintegration, of the surface course within a few months after paving.

Equipment

➤➤Rollers

Self-propelled rollers are required for the compaction of HMA. Towed-type rollers should not be used. Hand-held or vibrating plate compactors can be used in small, inaccessible areas. Typical self-propelled compaction rollers consist of the following types:

- Static Steel-wheeled
- Pneumatic-tired
- Vibratory Steel-wheeled

Static Steel-Wheeled Tandem Rollers Static Steel-wheeled rollers (Figure 6.04) have steel drums generally mounted on two tandem axles. Typical tandem static steel-wheeled rollers vary in weight from 2.7 to 12.7 metric tons (3 to 14 tons). On many types of static rollers, adding or removing ballast can vary the weight. For streets, highways and other heavy-duty pavement construction, a minimum gross weight of 9 metric tons (10 tons) is required. Static steel-wheeled rollers can be used for breakdown (initial) rolling, intermediate rolling, or finish rolling.

Static steel-wheeled tandem rollers should provide a minimum of 4.46 kg/mm (250 lb/in) mass (weight) per width on the compaction roll (drive wheel) when used for breakdown or intermediate rolling. Steel drums that are grooved, pitted, worn or warped should not be used. Steel drums should be checked with a sharp metal straightedge. Surface imperfections or rust may tend to pick up hot mix as it is being rolled. Water spray bars and wetting pads are used to prevent adhesion to the drums. Scraper bars are also utilized to remove any particulate matter that may build up on the drum.

Figure 6.05 illustrates the force exerted by a steel-wheeled roller on an HMA mixture when the surface under the mixture is firm. The arrows indicate the direction of lines of force through the mat. Notice that the lines of force directly under the roller extend through the pavement to the subgrade. The firm subgrade exerts a resistive force upward. The mixture between the roller and subgrade is compacted as a result of the two forces acting in opposite directions.

Static steel-wheeled rollers typically have one powered drum, often referred to as the drive wheel, and one non-powered steering drum called the tiller wheel. Orientation of the roller is critical in most cases, particularly during initial compaction. The roller's direction of travel should be such that the powered wheel passes over the uncompacted mixture first.

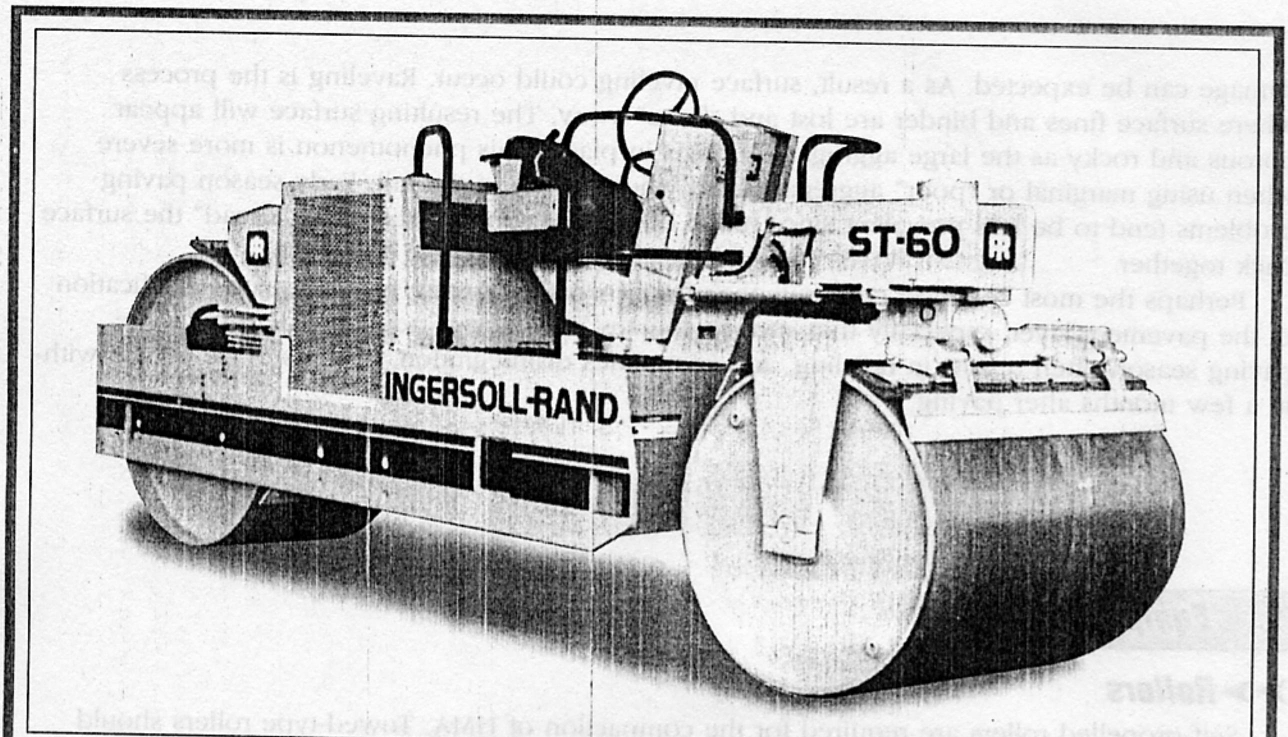

Figure 6.04 Static Steel-wheeled Roller (Courtesy of Ingersoll-Rand)

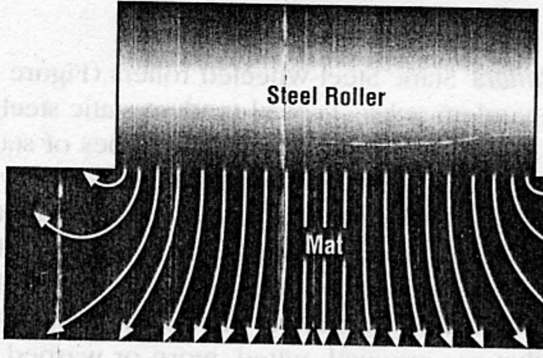

Figure 6.05 Forces Exerted on Mat by Steel-wheeled Rollers

Figure 6.06 illustrates the correct use of a steel-wheeled roller. The drive wheel is ahead of the tiller wheel in the direction of travel on the uncompacted mixture. It can be seen that there is a vertical force downward caused by the weight of the wheel. The arrows concentric with the drive wheel represent the rotational force on the wheel, which is transmitted to the mixture as the roller is propelled. This concentric force tends to move the mixture under the wheel rather than to push it away. The resultant of these forces approaches a direct vertical force from the drive wheel.

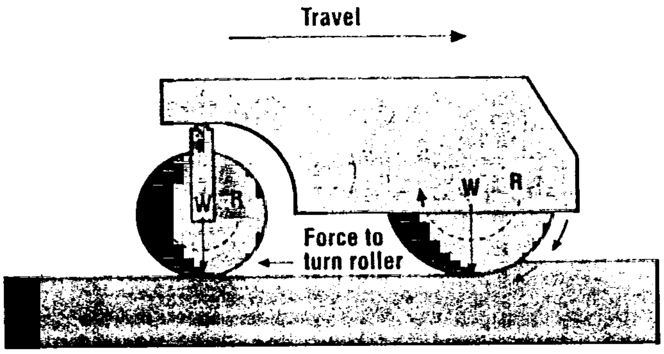

Figure 6.06 Proper Direction of Roller Travel

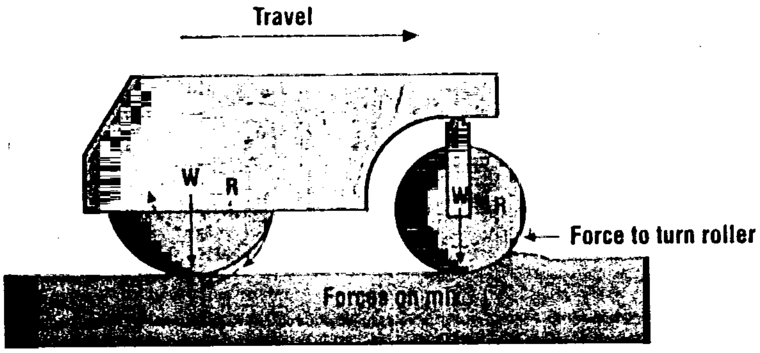

Figure 6.07 Improper Direction of Roller Travel

Figure 6.07 illustrates a steel-wheeled tandem roller being used incorrectly on an HMA mixture. The tiller wheel is in front, in the direction of travel. This can be a critical mistake on some mixtures, particularly during the breakdown pass. Since the tiller wheel is a dead wheel without power of its own, there is a tendency for it to push the mixture away from itself, causing a wave in front. An analysis within the mixture reveals two forces. One is a vertical force downward, and the other is a horizontal force forward. For compaction of a mixture, the desirable movement of all aggregate particles is vertically downward. Little, if any, densification occurs as a result of the horizontal movement within the mixture. Horizontal movement of the mixture can actually result in a reduction of density. Excessive horizontal movement can cause hairline cracks to appear in the surface of the mat. Differential cooling throughout the lift can make this problem worse, causing what is often called "heat checking."

There are other reasons for the drive wheel to travel on the mixture ahead of the tiller wheel, particularly during the breakdown pass of the roller. Since the drive wheel has the largest diameter, it presses with a flatter contact surface on the mixture. Therefore, the horizontal force from the wheel is minimized. Because the drive wheel has a larger diameter than the tiller wheel, it does not sink as deep into the mixture. This also reduces the horizontal component of force imparted by the wheel. The drive wheel is the heaviest wheel and is considered to be the compaction wheel. Since the best time to compact is when the resistance is the least, while the mixture is hot, the breakdown pass should be done with the compaction wheel on the mixture first.

When rolling on steep grades, the above mentioned procedure may need to be altered. On steep grades, the tiller wheel may need to be kept in front, following the direction of paving. The lighter tiller wheel provides initial compaction to increase the stability of the mixture before the heavier drive wheel contacts the mixture. This results in a reduced tendency for the mixture to move downhill.

The weight of the roller is transmitted to the mixture through the contact pressure that is exerted under the drums. Therefore, the contact pressure under the drums should not exceed the supporting capability of the mixture being compacted. Usually, heavier rollers can be used on harsher, more stable mixtures, particularly for breakdown passes. Somewhat lighter rollers may be necessary on less stable mixtures.

Pneumatic-Tired Rollers Pneumatic-tired rollers have rubber tires instead of steel tires or drums. They generally feature two tandem axles, with 3 to 4 tires on the front axle and 4 to 5 tires on the rear axle (Figure 6.08). The wheels oscillate; that is, they move up and down independently of one another.

Pneumatic-tired rollers can be ballasted to adjust their gross weight and, depending on size and type, may vary from 9 to 32 metric tons (10 to 35 tons). More important than gross weight, however, is the weight per wheel, which should range from 1360 to 1590 kg (3000 to 3500 lbs.) when the pneumatic-tired roller is to be used for breakdown or compaction rolling.

Pneumatic-tired rollers may be equipped with 380, 430, 510, or 610-mm (15, 17, 20, or 24-in.) wheels, and should have smooth tires for asphalt compaction. The tires must be inflated to equal pressures, with variation not exceeding 35 kilopascals (5 psi), to apply uniform pressure during rolling.

Pneumatic-tired rollers may be used for breakdown and intermediate rolling for compaction, and for conditioning a finished asphalt surface. Rubber-tired rollers have traditionally been utilized for intermediate rolling. With increased traffic and coarse, dense-graded mixtures, the pneumatic type rollers may provide the additional compactive effort needed to achieve specified density. Pneumatic type rollers are not recommended for breakdown rolling on steep grades.

Rolling for compaction and surface conditioning are two different processes and require different operating procedures.

Figure 6.09 illustrates the action of a pneumatic-tired roller when used for breakdown and intermediate rolling. The arrows illustrate typical lines of force in the mat.

As in the case of steel-wheeled rollers, when pneumatic-tired rollers are used, the mixture being compacted must be adequately confined for proper densification. Uniform subgrade strength may be more critical when pneumatic rollers are used because the individual wheels can exert high stress on small areas of subgrade weakness that wide, rigid steel drums tend to bridge.

When a rubber-tired roller is used for breakdown rolling, very little horizontal movement of the mixture occurs in the direction of travel. This is because each tire flattens slightly as it drives over the mixture permitting almost all of the compactive force to be exerted vertically on the mat. Horizontal movement of the mixture in the direction of travel occurs only if the tire diameter is too small and the tire sinks into the mixture. Excessive movement is an indication that the HMA is unstable or the roller being used is unsuited for breakdown rolling. There is some horizontal movement of the mixture under a pneumatic tire, but it tends to be at right angles to the direction of travel. It may cause small bumps in the mixture immediately adjacent to the tire.

Figure 6.08 Pneumatic (Rubber)-Tired Roller (Courtesy of Dynapak)

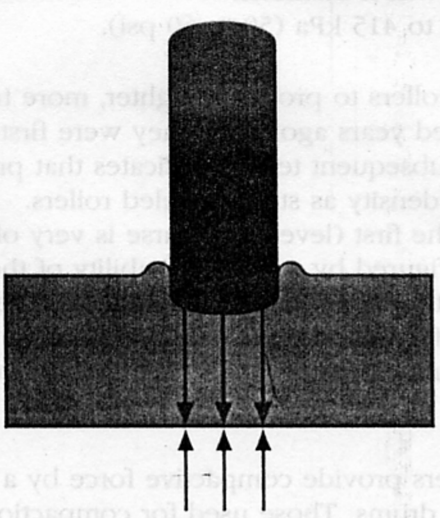

Figure 6.09 Forces Exerted by Pneumatic-Tired Roller During Compaction

These small bumps normally are of no significance and will be rolled out by subsequent passes. Reducing the tire pressure will reduce this lateral displacement. Additional passes should eliminate such bumps as well as any tire marks (ruts) in the mat surface. The surface may still look irregular but this appearance is mostly cosmetic. Because the tires must be allowed to heat up to avoid mixture sticking to them during breakdown and intermediate rolling, water is typically not used on the tires of a pneumatic roller. Mixture will stick to the tires during the warm-up period, but once they are hot, this will cease. Skirts placed around the tires will shorten the warm-up period and help keep the tires hot, particularly in cool or windy weather. As with steel-wheeled rollers, the drive wheels of the pneumatic-tired roller should be toward the paver.

Desirable pneumatic-tired roller requirements for breakdown and intermediate compaction are:

- A weight per wheel of 1360 to 1590 kg (3000 to 3500 lbs.).
- 510 mm (20-in.) minimum wheel diameter.
- Tire inflation pressure of 483 to 517 kPa (70 to 75 psi) when cold, and 620 kPa (90 psi) when hot.

These recommended tire pressures are applicable for most mixtures but can be reduced if necessary for mixtures with low stability.

The kneading action of a pneumatic-tired roller can also be employed to improve or toughen an asphalt pavement surface after normal paving operations have been completed. The rolling can be performed as much as two weeks after the pavement has been placed, provided the weather is warm and the pavement surface temperature is at least 38°C (100°F). The kneading operation can reduce pavement permeability and can increase pavement resistance to scuffing or abrasion by traffic.

Pneumatic-tired rollers are also ideal for correcting heat checking in the mat surface. Heat checking is the appearance of short, 50 to 100-mm (2 to 4-in.) long, disconnected hairline cracks after one or more passes of the static steel-wheeled roller.

When a pneumatic-tired roller is used for kneading a finished asphalt surface, the desirable requirements are:

- A 680 kg (1500-lb.) minimum weight per wheel.
- A 380 mm (15-in.) minimum wheel diameter.
- Tire inflation pressure of 345 to 415 kPa (50 to 60 psi).

The ability of pneumatic-tired rollers to provide a tighter, more traffic-resistant surface than steel-wheeled rollers was recognized years ago when they were first employed for the intermediate rolling of HMA pavements. Subsequent testing indicates that pneumatic-tired rollers will achieve about the same pavement density as steel-wheeled rollers.

In HMA overlay construction, the first (leveling) course is very often placed on an irregular surface that has been rutted or disfigured by traffic. The ability of the pneumatic-tired roller to apply uniform pressure over its entire width makes it desirable to be used for this course because it will apply compactive effort where it is needed most—in the wheel tracks. The bridging action of steel-wheeled rollers may prevent them from being as effective in similar situations.

Vibratory Rollers Vibratory rollers provide compactive force by a combination of weight and vibration of their steel compaction drums. Those used for compaction of HMA are self-propelled and vary in weight from 6 to 15 metric tons (7 to 17 tons). There are two basic models: the single drum units (Figure 6.10), and the double drum (tandem) units (Figure 6.11).

Either steel or pneumatic-tired wheels can provide propulsion for single drum vibratory models. Both drums usually provide propulsion for the double drum models. The drums on vibratory rollers vary from 0.9 to 1.5 meters (3 to 5 ft.) in diameter and 1.2 to 2.4 meters (4 to 8 ft.) in width. Their static weight in terms of drum width is generally from 2.9 to 3.2 kilograms per millimeter (160 to 180 lb. per in.).

Figure 6.10 Single Steel-Wheeled Vibratory Roller (Courtesy of Bomag)

The engine providing power for propulsion also powers the hydraulically driven vibrating unit. Vibrations are generated by a rotating eccentric weight inside the drum, the speed of which determines the frequency, or vibrations per minute (vpm), of the drum. The weight and distance from the shaft of the eccentric determines the amplitude, or amount of movement, of the impact force that is generated. Both the frequency and amplitude of the vibrations are controlled independently of roller travel and engine speed.

The vibration frequency of rollers used for HMA compaction is generally between 2000 and 3000 vibrations per minute, depending on the model and manufacturer. Some models provide only one or two specific frequency settings, while others may provide a full range of frequencies within certain limits, such as 2200 to 2800 vpm.

Vibratory rollers achieve compaction through a combination of three factors:

- Weight
- Impact forces (roller vibration)
- Vibration response in the mixture

Weight – Weight has been discussed in connection with steel-wheeled tandem rollers and pneumatic-tired rollers. The impact forces are those generated by vibration of the compaction drum and are regulated by controlling the frequency and amplitude of the vibration. The impact

Figure 6.11 Double Drum Vibratory Roller (Courtesy of Caterpillar)

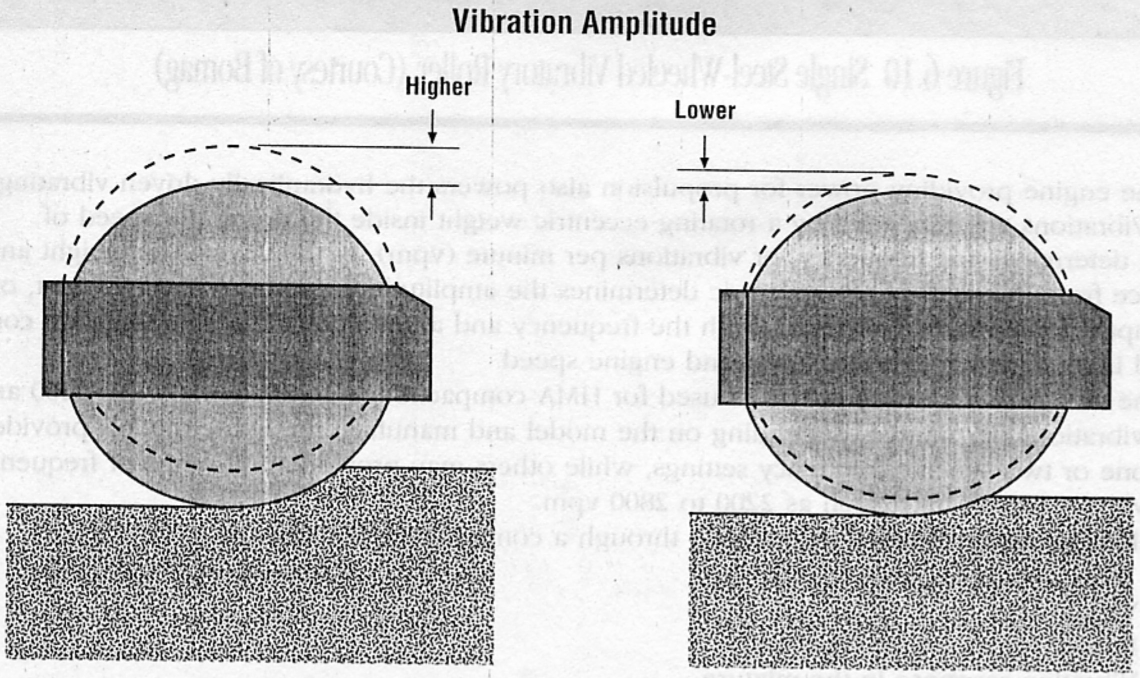

Figure 6.12 Illustration of Amplitude

force required to obtain specified densification of the mat varies with the temperature and properties of the mixture, the thickness of the mat and the support provided by the surface. It will also vary with the drum diameter and width and the roller's static weight and dynamic (impact) force.

The vibration response in the mixture is the reaction to the forces exerted upon it. As with other types of rollers, the mixture will compact easily or with difficulty depending on its temperature, cohesion, particle shape and texture, confinement and other factors. The thing that is different when vibratory rollers are used is that repetitive dynamic forces are being exerted on the mixture.

To use a vibratory roller effectively, it is necessary to have some understanding of the movements which influence the compaction forces, that is, frequency and amplitude of the vibrations.

Frequency – Roller drum vibrations are produced by off-center weights, called eccentrics, on a spinning shaft.

The speed of the shaft sets the frequency (the number of vibrations or downward impacts per minute).

Frequency is defined as the number of cycles per minute – a single cycle being one full turn of the eccentric. The eccentric is an off-center weight fastened to a shaft, typically inside the drum. As the shaft spins, the eccentric creates an outward force. The heavier the eccentric the greater the force produced. The farther it is from the shaft the greater the force produced. And the faster it spins, the greater the force produced.

As the roller moves ahead, its vibrating drum produces a rapid sequence of impacts on the surface. These impacts are equal to the frequency of vibration. For any given roller speed, the higher the frequency used, the closer the impact spacing will be and the smoother the surface will be. The manufacturer's advice on frequency should be used for each roller.

Amplitude – The roller drum moves up and down as it vibrates (Figure 6.12). When it changes direction in its up-and-down movement, it is momentarily at rest, just as the roller itself is at rest when it changes direction. Amplitude, then, is the greatest movement in one direction of a vibrating roller drum from a position at rest. The weight and distance of the eccentric from the shaft and the weight of the roller drum control the impact force. For any given drum weight, the heavier the eccentric is, and the farther away it is from the shaft, the higher the amplitude will be. On most heavy tandem vibratory rollers, the amplitude can be varied by the operator to suit paving conditions. For each roller, the manufacturer's advice on amplitude should be used.

Use of Vibratory Rollers To ensure smoothness under vibratory compaction, the frequency and roller speed should be matched so that there will be at least ten downward impacts of the vibration per foot of travel of the roller. The relationship between speed and frequency is illustrated in Figure 6.13. As the speed of the roller increases for a given frequency of vibration, the spacing of the impacts grows farther apart. In asphalt mixtures, it is generally agreed that the most desirable method is to use the maximum rated frequency with the speed of the roller adjusted to provide the desired impact spacing.

Figure 6.14 illustrates four different modes of using a vibratory roller equipped with two vibrating drums. The first mode shows the roller being used without vibration. It acts as a static steel-wheeled tandem roller. This is the mode utilized when using a vibratory roller for finish rolling. The second mode shows the use of vibration on the trailing drum with the leading drum in the static mode. This mode may be desirable on mixtures that have lower stability. The third mode illustrates the use of vibration with both drums, which is used on a stable mixture in order to achieve the maximum compactive energy. The fourth mode illustrates vibration only on

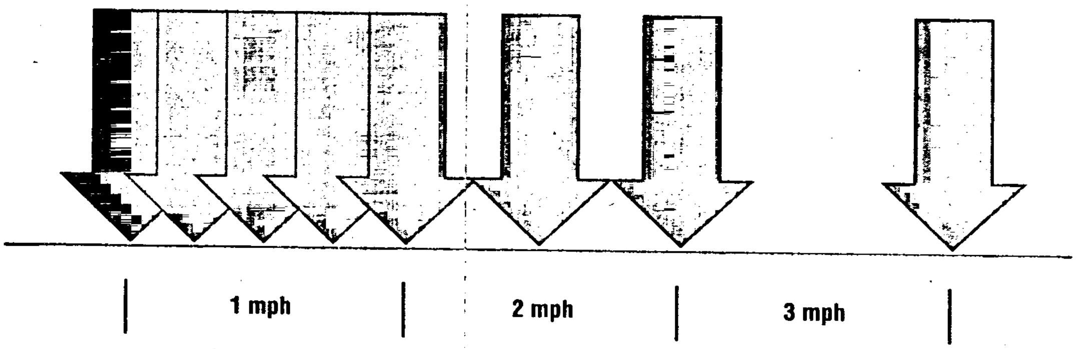

Figure 6.13 Relationship Between Speed and Vibration Frequency

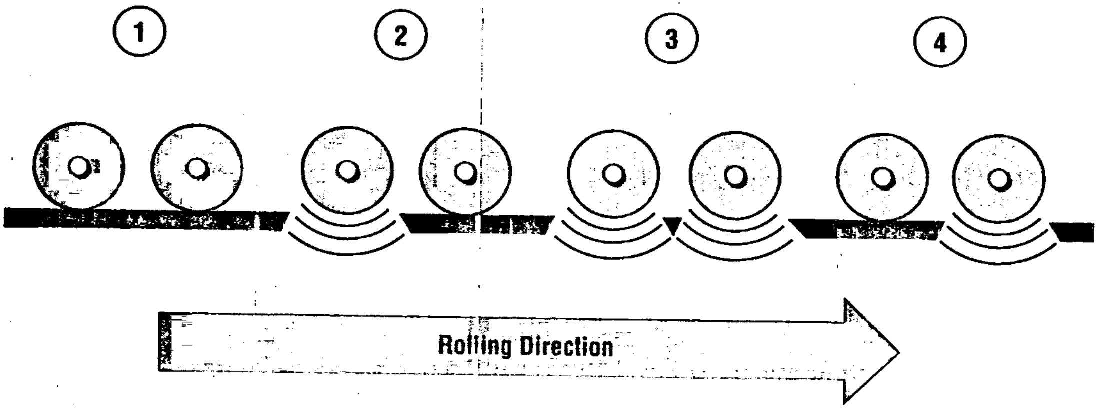

1) No vibration.
2) Vibration on the trailing wheel; leading wheel in static mode.
3) Vibration on both wheels.
4) Vibration on leading wheel; trailing wheel in static mode.

Figure 6.14 Different Modes of Vibration

the leading drum of the roller. This mode is used to achieve compaction with the leading drum while the trailing drum in the static condition provides a smoother finish. The selection of the mode of operation should be tailored to the mixture and the conditions of the project.

The energy imparted by the vibratory compactor is absorbed in the mixture being compacted. Controlling the amplitude permits the operator to vary the vibratory force, and therefore, to vary the energy imparted to the mixture. An amplitude adjustment may be necessary for each modification in the mixture being placed. For example, a change in the layer thickness, mixture temperature, mixture gradation, filler content or asphalt content may require adjustment in both the amplitude and frequency being used. It is important that the roller should be vibrating only when it is moving. If vibration continues while the roller is standing still or changing direction, each vibrating drum will leave an indentation in the pavement at the stopping point. Most modern rollers have automatic vibration cut-off devices that actuate when the roller stops moving.

Table 6.01 Guide for Setting Vibratory Compactor Controls - In Relation to Layer Thickness

Layer Thickness	Frequency	Amplitude
Thin	Maximum	Low
Thick	Maximum	High

Normally, vibration is not used in the compaction of very thin lifts. This is particularly true with sandy or tender type mixtures. In very thin lifts, there is insufficient material to absorb the energy imparted by the vibrating rollers. The energy passes through the mixture being compacted and rebounds from the surface of the pavement below. It re-enters the mixture and de-compacts the mat. For situations of this type, the vibratory roller should be used in the static mode. Table 6.01 shows guidelines for compacting thinner lifts that are substantial enough to hold a vibratory roller and for compacting thicker lifts.

Special attention may be necessary when using a vibratory roller on steep grades. For tender or low stability mixtures, the initial breakdown passes may need to be run in the static mode to prevent displacement of the mixture. Once initial stability is established, vibration can begin.

Caution should also be exercised when vibratory rolling is performed on extremely coarse mixtures. The aggregate structure (stone-on-stone) may be fractured under intense rolling. If specified density cannot be obtained with static steel-wheeled and/or pneumatic-tired rollers, vibratory rollers can be used, but the amplitude should be kept at the minimum necessary to achieve the specified density.

Rolling Procedures

The degree of density achieved in HMA is dependent on the amount of compactive effort applied before the mixture cools to 85°C (185°F). The variables that will affect the length of time in which compaction must be accomplished have been discussed. One that has been only briefly mentioned is the rate of mixture production. Increasing roller speed will not compensate for increased production rates; it will simply reduce the amount of compactive effort that is applied to a given area of pavement surface in a given time interval. The rolling speed, whether being used in the vibratory or static mode, should not exceed 5 to 8 kilometers per hour (3 to 5 mph). This rolling speed is the maximum recommended for static steel-wheeled, pneumatic-tired, and vibratory rollers.

Additional rollers will be needed when there is an increase in production if the current rollers cannot achieve the desired compaction on the increased amount of material. The number of rollers provided must be tailored to the conditions of the specific job and be adequate to obtain the desired compaction.

➤➤Determining Roller Requirements

The exact number of coverages (passes) of a roller or rollers that will be required to obtain adequate density is initially unknown due to uncertainty of the cooling rate of the mat. These

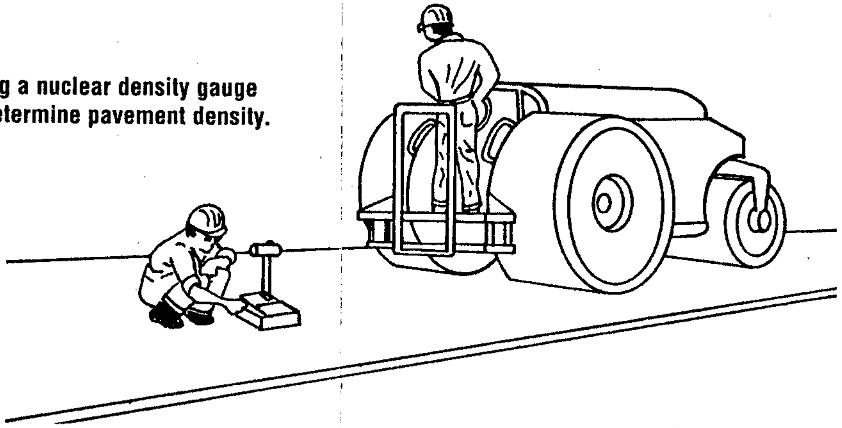

Figure 6.15 Constructing a Test Strip

uncertainties are resolved by the testing that is performed in the initial test strip, or control strip, and by observation during the early stages of the paving operation.

A number of studies have been made on the cooling rates of mixtures under varying conditions of mixture temperature, lift thickness and base temperature. The temperature of the mix and the thickness of the mat can be used to make a fairly accurate estimate of the time interval in which density must be achieved before the temperature of the mix falls below 85°C (185°F) (see Figure 6.03). This estimate can be used to determine the number of rollers required on the job.

A test strip will establish the rolling pattern to assure achievement of the required density and the proper riding quality, and to attain the optimum production rates with the given roller. In most cases where test strips are properly used, the rollers will compact the mix in the remaining pavement to meet the density requirements and produce a good riding surface (see Figure 6.15). Information on how to build a test strip is in the section on Control Strip Density in Chapter 7.

A rolling pattern that will provide the most uniform coverage of the paving lane should be planned and used. Since rollers are produced in a number of widths, a uniform pattern that applies to all rollers and conditions is not possible. For this reason, the best rolling pattern for each roller being used should be determined on a test strip. The following procedure can be used as a guide.

1) Before rolling the test pattern, decide how the roller will be operated for:
    a. Rolling speed.
    b. Lap pattern for paving width.
    c. Number of passes.
    d. Selection of roller operating zone behind the paver.

2) If the test pattern does not pass, a series of new test patterns should be run. The following steps are recommended:
    a. Slow the roller down.
    b. Take a 15-second test with a nuclear density gauge after each pass (or round trip) until maximum achievable density is indicated by the test results.

c. The correct rolling speed is always a balance between rolling fast for productivity and rolling to meet density and finish requirements. Therefore, if the selected speed obtains the required density, but leaves surface blemishes, reduce the speed until blemishes disappear.

d. Roller speeds should not exceed 8 km/h (5 mph).

3) The rolling pattern used on the test strip should be the same pattern that will be used on the remainder of the job.

a. The roller should not be operated slower than it will be operated on the remainder of the job.

b. If the number of roller passes required to obtain density on the test strip is high, the rollers may not be able to keep up with the paver at its normal speed on the rest of the job. In this case, the number of rollers must be increased or the rate of production must be decreased.

4) It is very important to recognize that during the rolling process all operating techniques are governed by mixture behavior. This will vary from job to job and from lift to lift.

➤➤Sequence of Rolling Operations

As mentioned before, there are three phases of rolling operations. They are:

- Breakdown (initial) rolling – The first pass of the roller on the freshly placed mat
- Intermediate rolling – All subsequent passes by the roller(s) to obtain required density before the mixture cools to 85°C (185°F)
- Finish rolling – Rolling done solely for the improvement of the surface while the mixture is still warm enough to permit removal of any roller marks

Within the first two operations, a sequence must be followed to ensure a mat of specified density, shape and smoothness. The sequence dictates which parts of the mat are rolled first and which last, and it varies for thin and thick layers.

Thin Layers (Lifts) When placing a thin lift (less than 50 mm [2 in.] compacted thickness) in single-lane width or full width, the mixture should be rolled in the following sequence:

1) Transverse joint
2) Outside edge
3) Breakdown rolling, beginning on the low side and progressing toward the high side
4) Intermediate rolling; same procedure as Step 3
5) Finish rolling

When paving a thin lift in echelon, or when abutting a previously placed lane or other lateral restraint, the mixture should be rolled in the following sequence:

1) Transverse joint
2) Longitudinal joint
3) Outside edge
4) Breakdown rolling, beginning on the low side and progressing toward the high side
5) Intermediate rolling; same procedure as Step 4
6) Finish rolling

Thick Layers (Lifts) When placing a thick lift (50 mm [2 in.] or more compacted thickness) in single-lane width or full width, the mixture should be rolled in the following sequence:

1) Transverse joint.
2) Breakdown rolling, beginning 300 to 380 mm (12 to 15 in.) from the lower unsupported edge and progressing toward the high side.
3) Breakdown rolling of outside edge. When within 300 mm (12 in.) of the unsupported edge, the roller should advance toward the edge in approximately 100 mm (4 in.) increments in successive passes.
4) Intermediate rolling, beginning on the low side and progressing toward the high side.
5) Finish rolling.

When paving a thick lift in echelon, or when abutting a previously placed lane or other lateral restraint, the mixture should be rolled in the following sequence:

1) Transverse joint.
2) Longitudinal joint.
3) Breakdown rolling, beginning at the longitudinal joint and progressing toward the outside edge. When within 300 mm (12 in.) of the unsupported edge, the roller should advance toward the edge in approximately 100 mm (4 in.) increments in successive passes.
4) Intermediate rolling, beginning on the low side and progressing toward the high side.
5) Finish rolling.

➤➤*Specific Rolling Procedures*

Rolling Transverse Joints When the transverse joint is next to an adjoining lane, the first pass is made with a static steel-wheeled roller moving along the longitudinal joint for a few feet. The surface is then checked with a straightedge and corrections are made if necessary. The joint is then rolled transversely, with 150 mm (6 in.) of the drum width on the newly laid material. This operation should be repeated with successive passes, each covering an additional 150 to 200 mm (6 to 8 in.) of the new mat, until the entire width of a drive roll is on the new mixture.

During transverse rolling, wooden boards of the proper thickness should be placed at the edge of the pavement to give the roller a surface to drive on once it passes the edge of the mat. If boards are not used, transverse rolling must stop 150 to 200 mm (6 to 8 in.) short of the outside edge to prevent damaging it, and the edge must be compacted later during longitudinal rolling.

Rolling Longitudinal Joints When using static steel-wheeled or pneumatic-tired rollers to roll longitudinal joints, only 100 to 150 mm (4 to 6 in.) of the roller width should ride on the newly placed lane on the first pass. The bulk of the roller width should ride on the previously compacted side of the joint. In each subsequent pass, more and more of the roller width is allowed on to the fresh mat, until the entire roller is on the new mixture.

A different procedure is employed with vibratory rollers. The roller drums are extended only 100 to 150 mm (4 to 6 in.) onto the previously compacted lane, with the rest of the drum width riding on the newly placed mixture. The roller continues to move along this line until a thoroughly compacted, neat joint is obtained.

For compaction purposes, longitudinal joints can be categorized into two categories: *hot* and *cold*. Each requires a different compaction procedure.

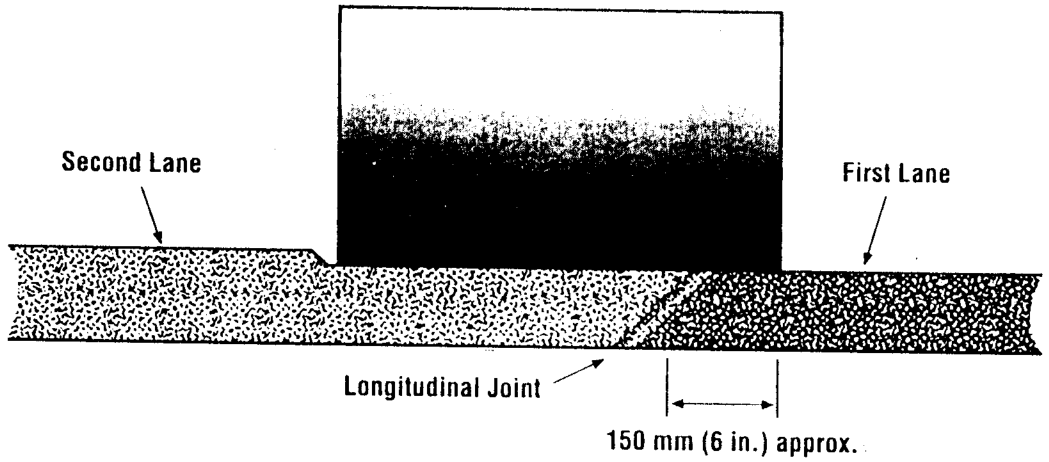

Figure 6.16 Rolling a Hot Longitudinal Joint

Hot Joints – A hot joint is one placed between two lanes at approximately the same time by pavers working in echelon. This produces the best longitudinal joint because both lanes are at or near the same temperature when rolled. The material becomes a single mass under the roller, and there is little or no difference in density between the two lanes. When paving in echelon, the breakdown roller following the lead paver leaves 75 to 150 mm (3 to 6 in.) of the common edge or joint unrolled between the pavers. This common joint is then compacted by the roller following the second paver on his first pass (Figure 6.16). In order to accomplish this effectively, the second paver and roller must keep as close as possible to the first paver to ensure that a uniform density is obtained across the joint.

Cold Joints – A cold joint is one between two lanes, one of which has cooled overnight or longer before placing the adjoining lane. Because of the difference in temperature between the two lanes, there is almost always a difference in density between the two sides of the joint, regardless of the rolling technique used.

In most cases there is a low-density zone at the joint in the lane placed first, and a higher density zone at the joint in the abutting lane. The only practical solution to eliminate this problem appears to be echelon paving or full-width paving. Echelon paving allows the joint to be compacted while the asphalt mixture is hot on both sides. However, since most asphalt paving is done in single lanes, the next best solution is to roll the joint as soon as possible. In any case, longitudinal joints should be rolled as close behind the paver as possible.

Rolling Edges Except in echelon and thick-lift paving, the edges of the pavement should be rolled concurrently with the longitudinal joint. In rolling edges, roller wheels should extend 50 to 100 mm (2 to 4 in.) beyond the pavement edge, provided that lateral displacement of the mixture is not excessive.

After longitudinal joints and edges have been compacted, breakdown rolling should follow immediately.

Table 6.02 Factors Influencing Compaction

Item	Effect	Corrections*
Aggregate		
Smooth Surfaces	Low interparticle friction	Use light rollers; lower mix temperature
Rough Surfaced	High interparticle friction	Use heavy rollers
Unsound	Breaks under steel-wheeled rollers	Use sound aggregate; use pneumatic rollers
Absorptive	Dries mix – difficult to compact	Increase asphalt in mix
Asphalt		
Viscosity		
– High	Particle movement restricted	Use heavy rollers; increase temperature
– Low	Particles move easily during compaction	Use light rollers; decrease temperature
Quantity		
– High	Unstable & plastic under roller	Decrease asphalt in mix
– Low	Reduced lubrication – difficult compaction	Increase asphalt in mix; use heavy rollers
Mix		
Excess Coarse Aggregate	Harsh mix – difficult to compact	Reduce coarse aggregate; use heavy rollers
Oversanded	Too workable – difficult to compact	Reduce sand in mix; use light rollers
Too Much Filler	Stiffens mix – difficult to compact	Reduce filler in mix; use heavy rollers
Too Little Filler	Low cohesion – mix may come apart	Increase filler in mix
Mix Temperature		
High	Difficult to compact – mix lacks cohesion	Decrease mixing temperature
Low	Difficult to compact – mix too stiff	Increase mixing temperature
Course Thickness		
Thick Lifts	Hold heat – more time to compact	Roll normally
Thin Lifts	Lose heat – less time to compact	Roll before mix cools; increase mix temperature
Weather Conditions		
Low Air Temperature	Cools mix rapidly	Roll before mix cools
Low Surface Temperature	Cools mix rapidly	Increase mix temperature
Wind	Cools mix – crusts surface	Increase lift thickness

* Corrections may be made on a trial basis at the plant or job site. Additional remedies may be derived from changes in mix design.

Breakdown Rolling It is important to start the breakdown rolling operation on the low side of the mat (usually the outside of the lane being paved) and progress toward the high side. The reason is that hot mixtures tend to migrate toward the low side of the mat during compaction. If rolling is started on the high side, migration is much more pronounced than if rolling starts from the low side. When adjoining lanes are placed, the same rolling procedure should be followed but only after compaction of the longitudinal joint.

Intermediate Rolling Intermediate rolling should follow breakdown rolling as closely as possible, while the asphalt mixture is still well above the minimum temperature at which densification can be achieved, 85°C (185°F). Intermediate rolling should be continuous until all of the mixture placed has been thoroughly compacted. Regardless of the type of rollers used, the rolling pattern should be developed in the same manner as breakdown rolling.

Finish Rolling Finish rolling is done solely for the improvement of the surface, that is, to remove roller marks so that the surface looks good and rides smoothly. It should be accomplished while the material is still warm enough for removal of roller marks. Vibratory rollers must be operated in the static mode when they are used for finish rolling on pavements that are below 85°C (185°F).

Summary

Compaction is the process of compressing a given volume of HMA into a smaller volume in order to increase the strength and durability of the mixture. It is essential in reducing the permeability of the pavement. Excessive penetration of air and water can be extremely damaging to in-place pavements. Table 6.01 contains a summary of items influencing compaction.

Several factors determine how easily and effectively a mixture can be compacted. Some of these factors are: mixture properties, environmental factors, layer thickness and underlying courses.

Three main types of rollers are commonly used: static steel-wheeled rollers, pneumatic-tired rollers, and vibratory rollers. The number and location of these rollers in the compaction train will vary from job to job. Careful consideration of specific conditions is necessary to determine the proper rolling procedures on each project. Awareness of changes in mixture properties, mixture production rates and environmental conditions is essential in assessing the effectiveness of the compaction process.

The ultimate goal in constructing a quality asphalt pavement is to produce a smooth, strong, uniform, highly durable driving surface. The compaction process is the final opportunity to achieve these results. Knowledge of the variables affecting compaction, along with careful observation, testing and experience, are the most valuable tools in achieving this goal.