Standard Guide for Structural Sealant Glazing[1]

This standard is issued under the fixed designation C 1401; the number immediately following the designation indicates the year of original adoption or, in the case of revision, the year of last revision. A number in parentheses indicates the year of last reapproval. A superscript epsilon (ϵ) indicates an editorial change since the last revision or reapproval.

1. Scope

1.1 Structural sealant glazing, hereinafter referred to as SSG, is an application where a sealant not only can function as a barrier against the passage of air and water through a building envelope, but also primarily provides structural support and attachment of glazing or other components to a window, curtain wall, or other framing system.

1.2 This guide provides information useful to design professionals, manufacturers, contractors, and others for the design and installation of a SSG system. This information is applicable only to this glazing method when used for a building wall that is not more than 15° from vertical; however, limited information is included concerning a sloped SSG application.

1.3 Only a silicone chemically curing sealant specifically formulated, tested, and marketed for structural sealant glazing is acceptable for a SSG system application.

1.4 The calculations and values stated in SI units are to be regarded as the standard. Values in parenthesis and inch-pound units are for information only. SI units in this guide are in conformance with IEEE/ASTM SI 10.

1.5 *This standard does not purport to address all of the safety concerns, if any, associated with its use. It is the responsibility of the user of this standard to establish appropriate safety and health practices and determine the applicability of regulatory limitations prior to use.*

2. Referenced Documents

2.1 *ASTM Standards:*

C 99 Test Method for Modulus of Rupture of Dimension Stone[2]

C 162 Terminology of Glass and Glass Products[3]

C 503 Specification for Marble Dimension Stone (Exterior)[2]

C 509 Specification for Elastomeric Cellular Preformed Gasket and Sealing Material[2]

C 568 Specification for Limestone Dimension Stone[2]

C 615 Specification for Granite Dimension Stone[2]

C 717 Terminology of Building Seals and Sealants[2]

C 719 Test Method for Adhesion and Cohesion of Elastomeric Joint Sealants Under Cyclic Movement (Hockman Cycle)[2]

C 794 Test Method for Adhesion-in-Peel of Elastomeric Joint Sealants[2]

C 864 Specification for Dense Elastomeric Compression Seal Gaskets, Setting Blocks and Spacers[2]

C 880 Test Method for Flexural Strength of Dimensional Stone[2]

C 920 Specification for Elastomeric Joint Sealants[2]

C 1036 Specification for Flat Glass[3]

C 1048 Specification for Heat-Treated Flat Glass—Kind HS, Kind FT Coated and Uncoated Glass[3]

C 1087 Test Method for Determining Compatibility of Liquid-Applied Sealants with Accessories Used in Structural Glazing Systems[2]

C 1115 Specification for Dense Elastomeric Silicone Rubber Gaskets and Accessories[2]

C 1135 Test Method for Determining Tensile-Adhesion Properties of Structural Sealants[2]

C 1172 Specification for Laminated Architectural Flat Glass[3]

C 1184 Specification for Structural Silicone Sealants[2]

C 1193 Guide for Use of Joint Sealants[2]

C 1249 Guide for Secondary Seal for Sealed Insulating Glass Units for Structural Sealant Glazing Applications[2]

C 1253 Test Method for Determining the Outgassing Potential of Sealant Backing[2]

C 1265 Test Method for Determining the Tensile Properties of an Insulating Glass Edge Seal for Structural Glazing Applications[2]

C 1294 Test Method for Compatibility of Insulating Glass Edge Sealants with Liquid-Applied Glazing Materials[2]

C 1330 Specification for Cylindrical Sealant Backing for Use With Cold Liquid-Applied Sealants[2]

C 1369 Specification for Secondary Edge Sealants for Structurally-Glazed Insulating Glass Units[2]

D 1566 Terminology Relating to Rubber[4]

D 4541 Test Method for Pull-Off Strength of Coatings Using Portable Adhesion Testers[5]

[1] This guide is under the jurisdiction of ASTM Committee C-24 on Sealants and is the direct responsibility of Subcommittee C24.35 on Structural Sealants.
Current edition approved July 10, 1998. Published May 1999.

[2] *Annual Book of ASTM Standards*, Vol 04.07.

[3] *Annual Book of ASTM Standards*, Vol 15.02.

[4] *Annual Book of ASTM Standards*, Vol 09.01.

[5] *Annual Book of ASTM Standards*, Vol 06.02.

E 283 Test Method for Determining the Rate of Air Leakage Through Exterior Windows, Curtain Walls, and Doors Under Specified Pressure Differences Across the Specimen[6]

E 330 Test Method for Structural Performance of Exterior Windows, Curtain Walls, and Doors by Uniform Static Air Pressure Difference[6]

E 331 Test Method for Water Penetration of Exterior Windows, Curtain Walls, and Doors by Uniform Static Air Pressure Difference[6]

E 547 Test Method for Water Penetration of Exterior Windows, Curtain Walls, and Doors by Cyclic Static Air Pressure Difference[6]

E 631 Terminology of Building Constructions[6]

E 783 Test Method for Field Measurement of Air Leakage Through Installed Exterior Windows and Doors[6]

E 1105 Test Method for Field Determination of Water Penetration of Installed Exterior Windows, Curtain Walls, and Doors by Uniform or Cyclic Static Air Pressure Difference[6]

E 1233 Test Method for Structural Performance of Exterior Windows, Curtain Walls, and Doors by Cyclic Static Air Pressure Difference[6]

E 1300 Practice for Determining Load Resistance of Glass in Buildings[6]

E 1424 Test Method for Determining the Rate of Air Leakage Through Exterior Windows, Curtain Walls, and Doors Under Specified Pressure and Temperature Differences Across the Specimen[6]

E 1425 Practice for Determining the Acoustical Performance of Exterior Windows and Doors[6]

E 1886 Test Method for Performance of Exterior Windows, Curtain Walls, Doors and Storm Shutters Impacted by Missile(s) and Exposed to Cyclic Pressure Differentials[6]

G 15 Terminology Relating to Corrosion and Corrosion Testing[7]

2.2 *IEEE/ASTM Standard:*

IEEE/ASTM SI 10 Standard for Use of the International System of Units (SI): The Modern Metric System[8]

2.3 *Aluminum Association Manual:*

Aluminum Design Manual[9]

2.4 *ANSI/ASCE Standard:*

ANSI/ASCE 7, Minimum Design Loads for Buildings and Other Structures[10]

2.5 *AAMA Standards:*

501.1 Standard Test Method for Metal Curtain Walls for Water Penetration Using Dynamic Pressure[11]

501.2 Field Check of Metal Curtain Walls for Water Leakage[11]

2.6 *ANSI Standard:*

Z97.1 Safety Performance Specifications and Methods of Test for Glazing Materials Used in Buildings[10]

2.7 *CPSC Standard:*

16 CFR 1201 Standard on Architectural Glazing Materials[12]

3. Terminology

3.1 *Definitions*:

3.1.1 Refer to Terminology C 162 for definitions of the following terms used in this guide: chip, chipped glass, double glazing unit, flat glass, glass, heat-strengthened glass, heat-treated, laminated glass, lite, pyrolitic coating, safety glass, skylight, spandrel glass, tempered glass, thermal stress, toughened glass, and wave.

3.1.2 Refer to Terminology C 717 for definitions of the following terms used in this guide: adhesive failure, bicellular sealant backing, bond breaker, butt glazing, cell, chemically curing sealant, closed cell, closed cell material, closed cell sealant backing, cohesive failure, compatibility, compound, cure, elastomeric, elongation, gasket, glazing, hardness, joint, lite, modulus, open cell, open cell material, open cell sealant backing, outgassing, primer, seal, sealant, sealant backing, secant modulus, setting block, silicone sealant, spacer, structural sealant, substrate, and tooling.

3.1.3 Refer to Terminology D 1566 for the definition of the following term used in this guide: compression.

3.1.4 Refer to Terminology E 631 for the definitions of the following terms used in this guide: air-leakage, anchorage, anchorage system, building envelope, cladding system, curtain wall, glaze, mechanical connection, mockup, operable, panel, performance standard, sealed insulating glass, shop drawing, specification, static load, tolerance, water-vapor retarder, weephole, and working drawing.

3.1.5 Refer to Terminology G 15 for the definition of the following term used in this guide: chemical conversion coating.

3.2 *Definitions of Terms Specific to This Standard:*

3.2.1 *aspect ratio (AR), n*—the ratio of the long dimension of the glass to the short dimension of the glass. AR is always equal to or greater than 1.0.

3.2.2 *bite, n*—The effective structural contact dimension of the structural sealant (see Figs. 1 and 2).

3.2.3 *construction-site glazing, n*—the installation, at a construction site, of glass or panels into a metal framing system under generally uncontrolled environmental conditions.

3.2.4 *durability, n*—ability of a SSG system and its parts to perform its required function over a period of time under the influence of the environment.

3.2.5 *durability limit, n*—point at which loss of performance leads to the end of service life.

3.2.6 *negative pressure, n*—an applied load, usually wind induced, that tends to pull a glass lite or panel away from a building surface.

3.2.7 *opacifier, n*—an opaque material applied to the interior facing surface of a glass spandrel panel, which can include

[6] *Annual Book of ASTM Standards*, Vol 04.11.

[7] *Annual Book of ASTM Standards*, Vol 03.02.

[8] *Annual Book of ASTM Standards*, Vol 14.02.

[9] Available from the Aluminum Association, 900 19th St., N.W. Washington, DC 20006.

[10] Available from American National Standards Institute, 11 W. 42nd St., 13th Floor, New York, NY 10036.

[11] Available from the Architectural Aluminum Manufacturers Association (AAMA).

[12] Available from the Consumer Product Safety Commission (CPSC), Washington, D.C. 20207.

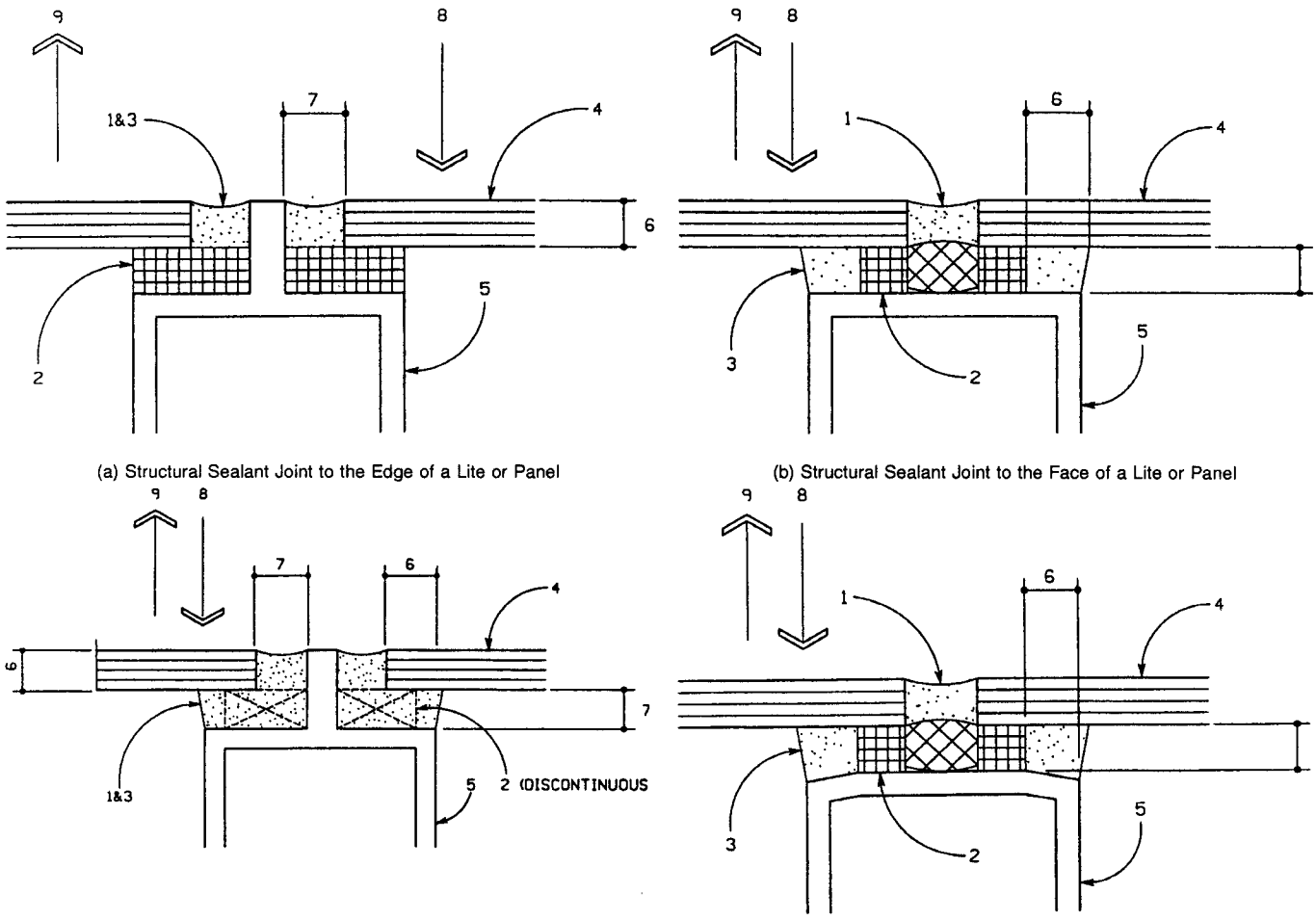

LEGEND

(1) Weather seal
(2) Spacer
(3) Structural Sealant
(4) Glass Lite or Panel
(5) Metal Framing System
(6) Bite (*B*)
(7) Thickness (*T*)
(8) Positive Lateral Load
(9) Negative Lateral Load
(10) Movement Due to Lateral Load
(11) Sealant in Compression Due to Lateral Load
(12) Sealant in Tension and Shear Due to Lateral Load

FIG. 1 Typical Structural Sealant Joint Configurations

materials, such as adhesively applied organic films, a liquid-applied silicone coating, or a fired-on ceramic enamel frit.

3.2.8 *positive pressure*, *n*—an applied load, usually wind induced, that tends to push a glass lite or panel inward from a building surface.

3.2.9 *premature deterioration*, *n*—failure to achieve predicted service life.

3.2.10 *service life*, *n*—actual period of time during which no excessive expenditure is required for maintenance or repair of a SSG system.

3.2.11 *shop glazing*, *n*—the installation, at a location remote to a construction site, of glass or panels into a metal framing system, under controlled environmental conditions.

3.2.12 *snap time*, *n*—the time in minutes at which a multicomponent sealant tears within itself and does not string when a spatula is removed from the curing sealant.

3.2.13 *stick system*, *n*—a metal framing system of numerous elements that is construction site assembled and field glazed, usually in-place on the face of a building.

3.2.14 *thermal bridge*, *n*—a method that transfers thermal energy, usually by means of a metallic path from the interior to the exterior of a window or curtain wall system.

3.2.15 *thickness*, *n*—the minimum structural sealant dimension between the structurally bonded substrates (see Figs. 1 and 2).

3.2.16 *unitized system*, *n*—a panelized metal framing system that is preassembled and usually shop-glazed, with the panels transported to a construction site for erection on a building.

3.3 *Symbols:*

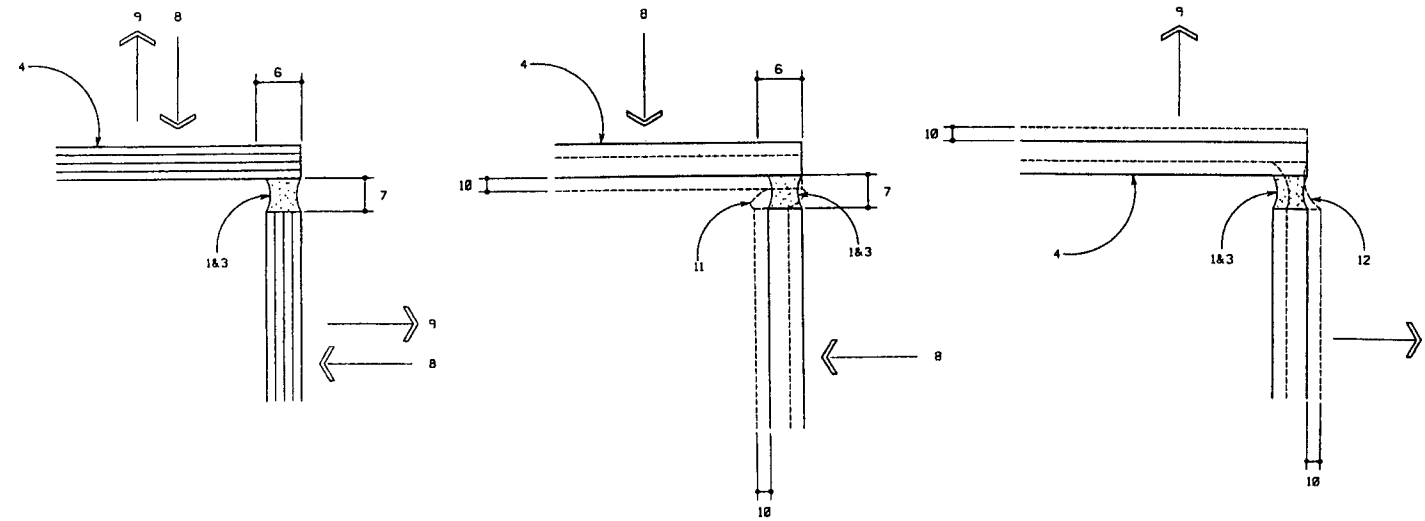

(a) Vertical Corner With One Lite or Panel Structurally Sealed to the Other

(b) Positive Applied Lateral Load

(c) Negative Applied Lateral Load

FIG. 2 Applied Load Transfer at a Vertical Corner Structural Sealant Joint (see Fig. 1 for Legend)

A = solar absorptivity coefficient.
α = coefficient of linear thermal movement mm/mm/°C (in./in./°F).
B = structural sealant joint bite mm (in.).
C = perpendicular distance between parallel sides m (ft).
ΔL = thermal movement mm (in.).
ΔT_s = summer temperature differential °C (°F).
ΔT_w = winter temperature differential °C (°F).
F_d = allowable structural sealant dead load stress kPa (psi).
F_t = allowable structural sealant tension stress kPa (psi).
F_v = allowable structural sealant shear stress kPa (psi).
f_t = computed tensile stress kPa (psi).
f_v = computed shear stress kPa (psi).
H = heat capacity constant.
L = side of lite or panel m (ft).
L_1 = long side of lite or panel m (ft).
L_2 = short side of the lite or panel m (ft).
% = shear movement percent.
P_w = lateral load due to wind kPa (psf).
R = radius of a lite or panel m (ft).
T = structural sealant joint thickness mm (in.).
T_a = ambient summer temperature °C (°F).
T_s = summer surface temperature °C (°F).
T_w = ambient winter temperature °C (°F).
W = unit weight of lite or panel kg/m^2 (lb/ft^2).
ϕ = angle in degrees.

4. Summary of Guide

4.1 *General*—This guide has been subdivided into major headings. A very brief description of each major heading is provided to assist the reader in locating general areas of information. For a more detailed listing of guide topics and section headings, refer to Appendix X1 for a complete listing of the numbered sections and their descriptors.

4.2 *Predesign Considerations (Section 6)*, in general, the responsibilities and relationships of the various participants in SSG system development and implementation.

4.3 *Performance Criteria Considerations (Sections 7-14)*, SSG system structural loads, movements, construction tolerances, weather tightness, sound transmission, fire resistance, and durability.

4.4 *System Design Considerations (Sections 15-18)*, information is provided about the basic types of SSG and related systems, as well as system weatherproofing concepts.

4.5 *Component Design Considerations (Sections 19-26)*, framing systems, framing finishes, glass, panels, structural sealants, weather seal sealants, and accessory material information.

4.6 *Structural Sealant Design Considerations (Sections 27-31)*, structural joint location and configuration, adhesion and compatibility concerns, theoretical structural design, and other design and weather seal considerations.

4.7 *Testing Considerations (Sections 32-37)*, predesign scale model wind and snow load testing, design and fabrication component testing for quality, adhesion, and compatibility, and full-size assembly mock-up testing information.

4.8 *Shop Glazing Considerations (Sections 38-42)*, materials prequalification, quality control programs, and inspection and testing quality assurance issues.

4.9 *Construction-Site Glazing Considerations (Sections 43-47)*, materials prequalification, quality control programs, and inspection and testing quality assurance issues.

4.10 *Post-Installation Considerations (Sections 48-51)*, quality control, maintenance, and periodic monitoring programs.

5. Significance and Use

5.1 The old saying "A chain is only as strong as its weakest link" is very applicable to a SSG system. In reality, a SSG system, to be successful, must establish and maintain a chain of adhesion. For example, a factory applied finish must adhere adequately to a metal framing member, a structural glazing sealant to that metal finish, that structural glazing sealant to a reflective coating on a glass lite, and lastly, that reflective

coating to a glass surface. This guide will assist in the identification and development of, among others, performance criteria, test methods, and industry practices that should be implemented to obtain the required structural glazing sealant adhesion and compatibility with other system components.

5.2 Although this guide has been arranged to permit easy access to specific areas of interest, it is highly recommended that the entire guide is read and understood before establishing the requirements for a particular SSG system.

5.3 This guide should not be the only criteria upon which the design and installation of a SSG system is based. The information herein is provided to assist in the development of a specific program with a goal of achieving a successful SSG system installation. Information and guidelines are provided for the evaluation, design, installation, and maintenance of a SSG system and many of its various components. Considering the range of properties of structural glazing silicone sealants, as well as the many types of framing system designs, material combinations that can be used, various material finishes, and the many types and varieties of accessories, the information contained herein is general in nature.

5.4 Generally, the design, fabrication, and installation of a SSG system requires more technical knowledge and experience then is required for a conventionally glazed window or curtain wall system. To ensure the success of a SSG system, it is important that suppliers, fabricators, and installers of materials and components have a sound knowledge of SSG system requirements and become involved in the design and planning for each application. Suppliers of, among others, sealants, framing finishes, glazing materials and components, and various accessories should review and agree with the developed SSG system plans, requirements, and quality control program.

PREDESIGN CONSIDERATIONS

6. Roles of Major Participants

6.1 *General*—Responsibility for the design, implementation, and maintenance of a SSG system depends largely on the contractual relationships between the participants and their extent of participation. This relationship can vary on individual projects, but it should be established clearly at the beginning and understood by all concerned parties. The following descriptions briefly describe the normal roles and duties generally ascribed to the participants, which usually is adequate for the development of a SSG system.

6.2 *Building Owner*— The building owner should review and approve the design concept and budget for the development and implementation of a SSG system. It is the building owner's responsibility to establish and maintain a realistic post-construction inspection and testing program to evaluate structural sealant integrity. Typically, the building owner also should authorize required maintenance, structural repairs, and replacement of components expeditiously.

6.3 *Architect*—The architect should provide the basic system design concept, performance criteria, and a cost estimate for the owner's review and approval. The architect also should provide the owner with an explanation of the SSG system design concept, degree of risk involved, and maintenance and eventual replacement requirements. The architect has the responsibility to conduct a feasibility review of the basic design concept, system features, and material requirements with potential manufacturers and contractors. The architect also should engage a SSG system consultant, if one is needed, and provide contract documents (working drawings and specifications) in accordance with the chosen construction method and the architect's professional services agreement. Construction administration by the architect usually includes, among others, shop drawing, product data, sample review, and approval or other appropriate action. The architect also makes on-site visits in accordance with the professional services agreement.

6.4 *Consultant*—A consultant usually is engaged by the architect but also can be engaged by the general contractor, curtain wall subcontractor, or the owner. The consultant provides guidance and technical expertise and establishes requirements for the design and implementation of the SSG system, among others.

6.5 *Building Code Authority*—All codes accept traditional glazing with conventional mechanical glazing retainage; however, some jurisdictions may permit SSG systems only with supplementary mechanical retainage. Other code jurisdiction requirements can include, among others, establishment and certification of specific structural sealant material properties, controlled inspection of a SSG system installation, and post-installation periodic inspection and certification programs. For example, the ICBO Evaluation Service, Inc., a subsidiary of the International Conference of Building Officials (ICBO), which publishes the Uniform Building Code (UBC), requires fulfilment of certain criteria before a structural sealant is acceptable for use in jurisdictions that have adopted the UBC. Code acceptance criteria may involve testing and conditions of testing that normally are not conducted by structural sealant manufacturers or require conditions of use that will limit the type and character of a SSG system. The building code and the specific code jurisdiction authorities should be consulted prior to any SSG system detailed design.

6.6 *Contractor*—The contractor selects the subcontractors and reviews, approves, and submits to the architect submittals, such as shop drawings, product data, and samples. The contractor also performs the construction and other services in accordance with the contract documents and the approved submittals. Supervision, direction, and coordination of the construction and other services, to assure compliance with the contract documents, also is performed by the contractor. Most importantly, the contractor has the responsibility for and control of construction means, methods, techniques, sequences, and procedures unless the contract documents direct otherwise.

6.7 *SSG System Designer*—This responsibility often is the architect's, however, a SSG system consultant or a curtain wall subcontractor also can perform this work. Responsibilities include the design of the SSG system to meet the architect's design parameters and performance criteria and development of specific material selection criteria for glass, metal finishes, sealants, gaskets, and other SSG system components. Importantly, the system designer also should develop a SSG system that can be resealed or reglazed, easily and adequately, if glass, sealant, or other component replacement is necessary.

6.8 *SSG System Subcontractor*—Responsibilities include obtaining the approval of, among others, metal finish, glass, and sealant manufacturers for use of their products in a SSG application; preparation and submittal of shop drawings to the general contractor for processing and approval; and, fabrication and installation of the SSG system in accordance with, among others, the contract documents, approved shop drawings, mock-ups, and component manufacturer's recommendations. Sometimes a separate SSG system installation subcontractor is retained. Coordination between the system manufacturer and the installer is required.

6.9 *Metal Framing Fabricator or Supplier*—Responsibilities include coordinating with the metal supplier and the finish applicator; monitoring of metal surface finish quality control; and, approval of the product for the specific SSG application. The metal framing fabricator also has the responsibility to provide representative production run samples of metal finishes for adhesion and compatibility evaluation by the structural sealant manufacturer.

6.10 *Glass Manufacturer or Fabricator*—Responsibilities include review of the project design requirements; recommendation of glass thickness and type to meet, among others, wind load and thermal stress conditions as specified for the SSG system; quality control of the secondary seal of insulating glass units and any glass coatings, such as reflective or low-emissivity; and, approval of the glass product(s) for a specific SSG application. The glass manufacturer also has the responsibility to provide production run representative samples of the glass type(s) for adhesion and compatibility evaluation by the structural sealant manufacturer. The glass manufacturer also has the responsibility to determine with the cooperation of the fabricator of the insulating glass units, if a separate party, the compatibility of at least the structural sealants and accessories that may have an effect on the performance of the insulating glass unit edge seal.

6.11 *Structural Sealant Manufacturer*—Responsibilities include conducting structural sealant compatibility testing with, among others, spacers, gaskets, setting blocks and other sealants; adhesion testing of the structural sealant(s) to the metal finish and glass substrates; review and approval of the structural sealant joint dimensions provided by the SSG system designer; recommendation of a sealant(s) for the structural and weather seals, as well as, if necessary, a primer; and approvals of the sealant products for the specific SSG application.

6.12 *Accessory Material Suppliers*—Accessory material suppliers have the responsibility to provide spacers, gaskets, setting blocks and other products of the correct material formulation, hardness, shape, and tolerances as specified by the architect, consultant, or SSG system designer. The accessory material supplier also has the responsibility to provide production run representative samples of the accessories for adhesion and compatibility evaluation by the structural sealant manufacturer.

PERFORMANCE CRITERIA CONSIDERATIONS

7. General

7.1 Typical performance criteria that are applicable to a conventional glazing system also apply to a SSG system; however, some of these performance criteria may require different treatment, extra care, or additional criteria. The following typical performance criteria are described where SSG issues need to be considered. Typically, some combination of the following structural loads and movements, depending on an engineering analysis of a particular SSG system's design requirements, may have to be considered. For example, the effect of wind load and thermal movement is a commonly encountered combination that may have to be evaluated when designing a structural sealant joint. Additional general glazing, as well as performance criteria information, is available from industry associations, such as the American Architectural Manufacturers Association (AAMA), the Glass Association of North America (GANA) (formerly the Flat Glass Marketing Association, and the American Society of Civil Engineers (ASCE).

8. Structural Loads

8.1 *Dead*—A SSG system, depending on a particular design, may require the structural sealant joint to resist a constant dead load stress. This usually occurs when glass or panels are unsupported by setting blocks or other mechanical devices and also at suspended soffit construction. The allowable dead load stress for design will depend on the modulus of the structural sealant and the dimensions of the structural sealant joint. Some structural sealant manufacturers will not permit glass or panels to be suspended or unsupported by setting blocks or other means. For those sealant manufacturers who permit dead load stressing of the structural sealant, there has been a precedent to limit the dead load stress to no more than 7 kPa (1 psi). The structural sealant manufacturer should be consulted early during SSG system design since not all sealant manufacturers will permit a constant dead load stress on the sealant joint or permit exceeding a 7 kPa (1 psi) limit.

8.2 *Wind*—The realistic establishment of negative and positive wind loads is important (**1, 2**).[13] It is primarily the wind loading conditions, except for some seismic zones, which determine the size and shape of a structural sealant joint in a SSG system. Other secondary loading conditions, such as dead load and thermal movement also can contribute to the design of a structural sealant joint. The building code applicable to a SSG system will establish minimum requirements for the wind load to be resisted by a curtain wall or window system and therefore a SSG system. Often, cladding wind loads are not adequately described by those building codes that use a simple table of wind load values. The ASCE standard ANSI/ASCE 7, which also is referenced in some of the national model building codes, provides a detailed analysis and description of the wind loads to be resisted by a curtain wall or window system. The building code and the ANSI/ASCE 7 determined wind load values typically apply to buildings of square or rectangular shape with vertical walls. The use of a building code or the analytical procedure in ANSI/ASCE 7 may not be sufficient for these buildings, particularly when of other shapes. Often, this is the case when a building is in an urban environment; of

[13] The boldface numbers in parentheses refers to the list of references at the end of this standard.

unusual configuration; closely related to other buildings as in a campus setting; or, in an area of unusual or unpredictable wind patterns. For these and other reasons scale model testing of a building in a boundary layer wind tunnel (BLWT) may be necessary (see 33.1.1).

8.3 *Snow*—For sloped wall surfaces or skylights, the effect of snow loading and drifting patterns on a SSG system must be considered. The building code and ANSI/ASCE 7 establish values that can be used for design. Also, the AAMA skylight and sloped glazing, 501.1 and 501.2, will provide the design professional with design information for snow loading and control on sloped surfaces. Since the actual pattern and velocity of wind flow around a building can have a dramatic impact on drifting and snow load, however, the use of a scale model testing facility to establish these patterns and loads is recommended (see 33.1.3). Snow and ice loads usually cause a long-term compressive stress on a structural sealant joint and can become another of the secondary loading conditions that should be evaluated when designing a SSG system. The effect of snow load on vertical wall surfaces usually is not a performance criterion; however, the additional dead load generated by hardened snow or ice sheets, which can form on vertical and other surfaces, may need to be considered.

8.4 *Live (Maintenance)*—Normally, loads transferred directly to a window or curtain wall framing member by maintenance platforms will not have a significant effect on the structural joints in a SSG system; however, the use of continuous maintenance tracks, as well as intermittent tie-back buttons or other devices, may have an influence on the practical aspects of SSG system design, such as adequate access to apply the structural sealant in the joint opening and the development of thermal bridges (see 11.4.1).

8.5 *Seismic*:

8.5.1 Seismic design largely is based on probability and economics (**1**). The magnitude and frequency of seismic loads cannot be determined with the same degree of accuracy as other types of building loads. It is possible the magnitude of loading may vary by a factor of two or more; therefore, due to economic reasons, a commonly accepted earthquake design philosophy is to control major structural damage while allowing some minor nonstructural damage as a result of an earthquake.

8.5.2 The applicable building code should be consulted for seismic design guidelines. There are benefits to using a SSG system in areas prone to earthquakes. The resilient attachment of a glass lite or panel to the supporting framework by the structural sealant joint has proven to be beneficial in controlling and in some cases eliminating breakage normally experienced during a small to moderate earthquake. Since the lite or panel is not captured in a metal glazing pocket the opportunity for it to impact the metal glazing pocket surfaces is minimized, eliminating a primary cause of breakage. Depending on system design, however, adjacent glass lite or panel edges could contact each other and cause breakage or other effects. Also, when a glass lite break does occur, the SSG system, due to continuous attachment of the glass edge, can retain much if not all of the broken glass, depending on glass type, and provided that the structural joint retains sufficient integrity. Resilient attachment of a glass lite also has proven beneficial in other violent natural occurrences such as hurricanes.

8.5.3 The level of performance required of a SSG system during and after an earthquake will vary depending on the system design philosophy. The SSG system should remain stable after an earthquake. For example, depending on the magnitude of an earthquake, glass may or may not break. Laminated glass often is used in seismic regions so that it can remain in the opening if it does break; however, whether or not remedial work is required to regain SSG system functionality, for example, air or water resistance and structural performance, is a choice for the designer, depending on building code requirements, which will affect the design and cost of the SSG system.

8.5.4 Racking motion of a building frame in an earthquake will cause planar motion of a glass lite or panel, typically causing a shear stress in a structural sealant joint. Although conventional SSG systems perform well in an earthquake, consideration should be given to isolating the lite or panel from building frame movement. One method to consider is to structurally adhere the lite or panel to a subframe, then attach the subframe to the primary curtain wall or window framing members with mechanical fasteners in slotted holes (**3**).

8.6 *Missile Impact*— Windborne debris has been established as a principal cause of glass breakage during windstorms (**4**). The designer of a SSG system may have to make provisions in the system design to resist large and small missile impacts (**5**). At lower floors, large objects, such as framing members and facade elements from nearby collapsed structures and at lower and upper floors windborne gravel from ballasted roofs, the largest source of glass breakage, tend to strike a building envelope. If the building envelope does not remain intact during a windstorm, the wind-induced increase to a building's internal pressure adds to the wind-induced external suction on leeward walls and roofs, thereby increasing the possibility of a structural failure or collapse of facade elements. In addition, breaching the envelope allows damage to the building interior and potential harm to occupants. Test Method E 1886 can be used to determine the performance of a window or curtain wall when impacted by a missile and exposed to a cyclic pressure differentials, as is commonly encountered during these storms. Some code jurisdictions, for example Dade County, FL, have adopted code provisions relative to impact resistance, which may affect the design of an SSG system.

9. Movements

9.1 *Building Motion*— Tall buildings will respond to wind pressure and other lateral forces, such as earthquakes, by swaying laterally or twisting due to torsional moments. The magnitude of these movements can be determined by a structural engineer or by scale model testing in a BLWT (see 33.1.1). These movements usually are expressed as an offset at each story relative to adjacent stories (story drift). These movements can create a shear stress, which may have to be considered with other secondary stresses in the design of the structural sealant and other joints of a SSG system.

9.2 *Thermal Movement*— The effect of thermal movement always must be considered and provided for in the design of a

SSG system. If not, excessive air leakage and water infiltration, as well as potential structural problems, can occur. The effect of thermal movement within the structural sealant joint, due to differential thermal movement between glass or panels and the supporting framework, should be investigated for any effects on the structural sealant joint that may have to be considered along with other structural sealant joint secondary stresses.

9.3 *Live Load*—Deflection caused by structure or floor live loading should be considered for SSG system sealant joints, such as expansion joints, that occur usually at each floor level in multistory construction. The building structural engineer can supply live load deflection criteria for use in designing the SSG system. Actual live loads can be highly variable (**6**). A multistory building, with the same design live load for all floors, will have the actual live load, which can be substantially less than a code prescribed value, vary from floor to floor and from one area of a floor to another. Very rarely will the live load be uniform everywhere. Where live load, and thus deflection of a structure varies, the relative difference in live load deflection between floors should be considered in the multistory SSG system expansion joint width design.

9.4 *Dead Load*—Deflection caused by structure or floor dead loading also should be considered for SSG system expansion joints. The building structural engineer can supply dead load deflection criteria for SSG system expansion joint design.

9.5 *Framing Effects*:

9.5.1 *Elastic Frame Deformation*—Multistory concrete structures, and to a lessor degree steel, shorten elastically almost immediately due to the application of loads (**6, 7**). Frame shortening, the degree of which can be estimated by a structural engineer, will cause an irreversible narrowing of SSG system expansion joints that typically occur at each floor level in multistory construction. Frame shortening can be compensated for by building each floor level slightly higher, in effect negating most of the short-term shortening that occurs before SSG system installation. Lower floors of multistory structures will experience greater shortening then upper floors. For each concrete column, the amount of shortening is dependent on, among others, the amount of reinforcement and the time of application of loads (dead load of additional floors and live load). Additionally, joint width narrowing can be considered during the design of an SSG system expansion joint. Some of the frame shortening affect will occur before the cladding is erected and the size of the SSG system expansion joint opening is established. Presently, the amount of shortening that occurs before the joint opening is established is determined by an informed estimate, and therefore, should be conservative.

9.5.2 *Creep*—The time dependent deformation of materials while loaded, in particular for a concrete structure, should be included in SSG system floor level expansion joint design. This deformation, which occurs at a decreasing rate as time progresses, can cause a continuing decrease in the width of an expansion joint opening in multistory and other buildings. Creep, in contrast to elastic frame shortening, can occur over a long period of time (**6, 7**). The building structural engineer can provide creep deflection criteria for SSG system expansion joint design.

9.5.3 *Shrinkage*—Concrete framed structures will undergo long-term shrinkage for a period of months (**6, 7**). The rate of shrinkage is dependent on the initial amount of concrete mix water present, ambient temperatures, rate of air movement, relative humidity of the surrounding air, the shape and size of the concrete section, and the amount and type of aggregate in the concrete mix, among others. Reference (**8**) lists guidelines for some shrinkage values for concrete and other materials. Shrinkage criteria can be provided by a structural engineer and included in the SSG system floor level expansion joint design or can be compensated for in the construction of the formwork. Shrinkage effects should be included in the design of a SSG system expansion joint in multistory construction. Some of the frame shrinkage affect will occur before the cladding is erected and the size of a SSG system expansion joint opening is established. Presently, the amount of shrinkage that occurs before the expansion joint opening is established is determined by an informed estimate, and therefore, should be conservative.

9.6 *Seismic*—For successful seismic performance, the SSG system must be capable of retaining required performance levels without glass or other breakage while accommodating differential movements between building stories. As was previously indicated, SSG system structural sealant joints have performed well during small to moderate earthquakes. The structural sealant joint permits the lite or panel and framing to move somewhat independently of one another, while generally maintaining seals and preventing edges from contacting the SSG system metal framing members or each other. Seismic performance can be enhanced by increasing the thickness of the structural sealant joint. This will decrease the shear stress developed in the structural sealant joint during racking of the SSG system; however, it may increase the tendency of adjacent glass lites or panels to come into contact with each other. This increase also should be evaluated for its impact when, at other times, the primary lateral load is applied. Depending on the structural sealant modulus and the structural joint thickness, a glass lite or panel could be pulled off setting blocks with a sufficiently large negative applied load. Another technique to enhance seismic performance is to structurally seal a lite or panel to a subframe, usually by shop glazing, which then is mechanically attached to a metal framing system or the building frame in a manner that permits differential movement, both vertically and horizontally, between the subframe and the framing system or building (**3**). The subframe mechanical attachment mechanism then is designed to accommodate the expected seismic movement.

10. Construction Tolerances

10.1 *General*—The SSG system design must respond to tolerances likely to effect its fabrication and installation (**9**). The SSG system performance criteria should specify the allowable material, fabrication, and erection tolerances. Minimum and maximum deviation from other performance criteria also need to be realistically established. Bowed glass, under- or over-sized glass, straightness of framing members, and gasket size variation all must be considered during system design relative to their effect on the dimensions of a structural sealant joint opening.

10.2 *Material*—Dimensional tolerances of materials that are

glazed structurally to the supporting framework must be considered. Examples of tolerances to be considered are out of plane glass or panels, dimensionally under or over sized glass or panels, and straightness, as well as profile dimensional tolerances of gaskets and spacers used in conjunction with a structural sealant joint. A structural sealant joint opening should not become too small, due to a glass or panel dimensional tolerance that makes the opening smaller than intended, and thereby perhaps structurally deficient. Conversely, the effects of a dimensional tolerance that would tend to enlarge a joint opening also must be considered. Concerns that may develop include inadequate support of the glass or panels on setting blocks, an increase in the elongation characteristics of the structural sealant, and a potential inability to control the structural sealant application and resulting joint profile, primarily due to the glass or panel not sitting tightly on the spacer or gasket that forms one face of the joint opening.

10.3 *Fabrication*— Dimensional tolerances for fabrication of components also must be considered for their effect on the structural sealant joint opening. The fabrication tolerances of the framework, for example, straightness of framing members, squareness of unit frames, and aluminum framing cutting tolerances, need to be considered in conjunction with the material or fabrication tolerances of glass or panels that will be glazed structurally to the supporting framework. This is necessary so that the structural sealant joint opening dimensions will be within the acceptable dimensional tolerance range.

10.4 *Erection*—For a shop glazed SSG system the effect of erection tolerances on the structural sealant joint are usually not applicable; however, for a field glazed system, the effect of erection tolerances becomes important to SSG system successful performance. Erection tolerances must be considered and controlled adequately to insure that a structural sealant joint opening is created at the construction site that meets at least the specified minimum and maximum joint opening dimensions. Adequate field quality control procedures are required.

11. Weather Tightness

11.1 *General*—The purpose of an exterior wall is to separate the interior, conditioned spaces of the building from the exterior elements; therefore, an exterior wall must respond to performance characteristics, which include, among others, air infiltration, water infiltration, thermal performance, and acoustical performance. In general, SSG has little effect on these performance characteristics compared to other parameters, such as type of fenestration system, wall system design, type of glazing, and fabrication workmanship.

11.2 *Air Infiltration or Exfiltration*—Air infiltration or exfiltration for a SSG system can be considerably less than for a conventional glazing system. This usually is a result of the structural sealant joint, which is continuous, as well as the completely sealed nature of these systems. Many openings that can occur in a conventional glazing system do not occur in a SSG system; however, weepholes or tubes, weatherseal sealant joints between curtain wall and window units, floor level expansion joints, and termination conditions of a curtain wall or window system, can be a source of air leakage if not designed and installed properly. The use of an operable panel or vent within a wall or window system also can be a source of air leakage. A vent usually is conventionally weather sealed with gaskets, which can experience inadequate or nonuniform sealing pressure or compression set, resulting in air leakage. Usually it is these conditions that contribute the majority of air leakage to a SSG system.

11.3 *Water Infiltration*—There can be a false sense of confidence that a SSG system is inherently water-tight since a structural sealant joint is continuous, and therefore, there are no entry points for infiltrating water. This is true for a four-side but not for a two-side SSG system. Weep tubes, weatherseal sealant joints between curtain wall and window units, preformed gaskets at other than four-side SSG systems, floor level expansion joints, and termination conditions of a curtain wall or widow system can be a source of water leakage if not designed and installed properly. An operable vent also can be a source of water infiltration for the reasons described in 11.2. It also should be apparent that air leakage paths can be prime sources of water infiltration during a rain storm. A SSG system should be designed so that condensed vapor and infiltrated water, from whatever source, can be controlled and drained adequately to the exterior. This precludes the contact and build up of water against the structural sealant joints, which may over a period of time contribute to potential adhesion loss. Typically, an internal drainage system, to intercept infiltrated water and weep it to the exterior, should be included in a window system and also at horizontal nonstructural sealant joints, that occur typically at each floor level, in a multistory curtain wall system. Consideration also should be given to directing condensate or infiltrating water, that flows downward on the interior face of a spandrel glass or other panel, away from a SSG joint at the bottom of the spandrel glass or panel.

11.4 *Thermal Performance*:

11.4.1 *Condensation Resistance*—The condensation resistance of a SSG system can be quite good. This is a result of the aluminum supporting framework being mostly within the conditioned envelope of the building, with the glass or panels separated from the framework by a thermal break, the structural sealant joint; however, there are areas in a SSG system that might not be broken thermally. Usually these areas occur at maintenance platform tracks, tie-back buttons, operable panels or vents, projecting fins (see Fig. 1c), or other devices that can create a thermal bridge to the supporting metal framework and therefore can become potential points of condensation or frost formation. Attempts should be made to minimize thermal bridges. An adequate water-vapor retarder and insulation system should be designed for the opaque wall areas to control the flow of vapor into the SSG system and potential frost or condensate formation at any thermal bridges. Mechanisms should be provided so that condensed water within the wall system is drained to the exterior to preclude the potentially detrimental build-up of water against structural sealant joints.

11.4.2 *Thermal Transmittance*—A SSG system can be among the most energy efficient of all presently available glazing systems for the reasons described in 11.4.1. This is especially true with four-side and to a lesser degree for two-side SSG systems.

12. Sound Transmission

12.1 Sound transmission control through a SSG system is no different than through a conventional glazing system; however, the resilient mounting of glass or panels and the usually completely sealed characteristics of a SSG system usually will provide better sound attenuating characteristics than conventional glazing. Sound transmission characteristics can be determined by performing acoustic testing on a full-size mock-up that typically is used to verify other performance criteria, such as wind load resistance. For relatively small SSG windows, 1.9 to 2.2 m^2 (20 to 24 ft^2) in area, Practice E 1425 can be used to establish acoustical properties.

13. Fire Resistance

13.1 Concerns related to the fire resistance of a SSG system are no different than those associated with a conventionally glazed system. It has been reported that in a fire situation the first element to fail is the glass, which cracks due to thermal stress soon after the onset of the fire. As the fire temperature climbs, the supporting aluminum framework then will lose strength, resulting in deformation of the framework members, followed by failure of the structural sealant. In a fire situation, a SSG system should be more advantageous due to its potential ability to retain broken glass fragments for a period of time, preventing them from raining down on pedestrian areas below.

14. Durability

14.1 *History*—In general, SSG work began with an all-glass entry and lobby system first marketed in 1965 by PPG Industries as the PPG TVS system. These all-glass systems, including supporting mullions, were two-side structurally glazed. The first two-side aluminum framed SSG systems were developed about 1970. These systems initially were designed only for glazing with monolithic glass. The first large application of a four-side, monolithic glass, SSG curtain wall system, was the former SHG Incorporated headquarters building in Detroit, MI, which was built in 1971. This is the oldest four-side SSG curtain wall system installation when considering durability and successful performance. The use of insulating glass in SSG systems began about 1976 for two-side and about 1978 for four-side support systems **(10)**.

14.2 Presently, there is no method available to adequately predict the durability limit of a SSG system; therefore, it is not possible to predict a future point in time when a SSG system may lose its effectiveness, exhibit premature deterioration, and require remedial work. Given this uncertainty, a SSG system can have more risk than a conventional glazing system. Presently, the best measures to employ to achieve durability are to use proven materials and techniques of good quality; to have an effective quality control program during fabrication and erection; and, to build upon the successful performance of previous SSG systems. Some environmental and laboratory testing for a short time period has been performed indicating that for the testing circumstances a structural sealant does not detrimentally change in properties and performance **(11)**.

SYSTEM DESIGN CONSIDERATIONS

15. General

15.1 In general, the major factors influencing SSG system selection are building code requirements, desired aesthetic appearance, glass type(s) required, cost, field-glazing versus shop-glazing, and post construction inspection and maintenance requirements. In addition to custom designed systems, proprietary systems from various manufacturers are available, which may provide the desired aesthetic appearance, and also may help to reduce costs and provide an opportunity for examination and evaluation of similar completed installations.

15.2 Features and advantages of SSG systems include more design freedom; reduction of glass thermal breakage potential; provision of a natural thermal break with very little or no exposed metal; reduced air and water infiltration; the potential for a less costly system compared to conventional glazing; the potential to reduce breakage from wind and seismic loads and dead loads, such as snow; and field or shop glazing potential. The choice between a shop or field glazing program should be evaluated carefully **(12)**.

15.3 The major concerns of SSG work include partial or complete reliance on adhesion as the primary support system for glass lites or panels, with less redundancy than a mechanically attached system, and uncertainty over long-term durability. Other potential problems of SSG work include compatibility of gaskets, setting blocks and other sealants with the SSG system; sealant adhesion to metal finishes, factory-applied paint finishes, and reflective glass coatings; structural sealant and primer, if required, being within their respective shelf-lives; obtaining adequate quality control during sealant installation; and providing for replacement of structural sealant joints due to construction damage or other concerns.

16. Basic Systems

16.1 *General*—There are numerous variations to the basic systems presented in this section, which are dependent on the many designs available from a curtain wall or window contractor. These variations are offered only as generalizations. Generally, there are two basic types of SSG systems, where the structural sealant joints occur on two- or four-sides of a glass lite or other rectangular shape panel. The role of the structural sealant in both systems is equally important. A two-side SSG system requires the same attention to detail as a four-side system. For both types, the structural sealant transfers loads imposed upon a glass lite or panel to a metal framing system. The following includes a general description of basic SSG systems.

16.2 *Two-side*:

16.2.1 A two-side SSG system provides structural support of a glass lite or panel using a structural sealant for two opposite sides of a panel, with the other two sides retained using conventional mechanical fasteners (Fig. 3). Manufacturers have standard designs available for interior or exterior glazing of the structural sealants. Usually, these systems are designed so the structural sealant retains vertical glass or panel edges providing an aesthetic effect of a horizontal ribbon of glass or panels bordered by exposed metal mullions. This same effect also can be obtained vertically by using the structural sealant for the horizontal edges and the exposed metal mullions for the vertical edges.

16.2.2 This type of SSG system, with mechanical fasteners on two sides, can have a lower degree of risk then a four-side

FIG. 3 Two-Side SSG System

FIG. 4 Four-Side SSG System

system, which has no mechanical fasteners. Two-side systems are available for construction-site or shop glazing of a structural sealant. Construction-site glazing requires structural sealants with a relatively long cure time of up to three weeks, depending on the particular structural sealant, which will require temporary support of a glass lite or panel until the sealant cures. Shop glazing can use these same structural sealants or other formulations that can cure in three hours to two days, facilitating handling of system components. Preference should be given to shop glazed SSG systems, which are more controllable relative to obtaining adequate sealant adhesion then construction-site glazed systems. Shop glazing also is preferred, to gain better control of the structural sealant installation, if an edge retained by the structural sealant is the long side of a glass lite or panel, particularly with a panel that has an aspect ratio of about 2:1 or greater.

16.3 *Four-Side*:

16.3.1 A four-side SSG system provides structural support of a rectangular glass or panel using structural sealant for all four sides. There are no mechanical connections or fasteners to retain a glass or panel to the metal framing system (Fig. 4). Sometimes, various types of metal retention devices are used to provide some degree of mechanical retention should a loss of structural sealant adhesion occur (Fig. 5). These systems also are available both as custom and proprietary designs.

16.3.2 A four-side SSG system can provide the aesthetic appearance of an all-glass or panel facade with no visible metal parts and relatively narrow sealant or other joints between panels. With no exposed metal parts and completely sealed joints, these systems can be very energy efficient compared to conventional metal and glass curtain wall or window systems. They also can have a higher degree of risk then two-side SSG systems since they rely only on the adhesion of a structural sealant to retain the glass lites or panels. With no exterior metal mullion caps, thermal stressing of a glass lite is reduced since there is no shading of the glass edge by the cap, and wind load induced stressing of the lite is more evenly distributed to the metal framing system by a structural glazing sealant, thus reducing the possibility of localized cracking of glass.

16.3.3 To gain optimum control of structural sealant application and minimize the risk of a structural sealant failure, four-side SSG systems should be designed for shop glazing of the structural sealant. There are other benefits of shop glazing that can contribute to efficiencies in scheduling and installation, such as, fewer weather-related technical issues to resolve than with construction-site glazing. In general, construction-site structural sealant installation should not be considered without consultation with and approval from at least the structural sealant manufacturer, metal framing supplier, and the glass or panel manufacturer. Typically, system maintenance of a four-side SSG system occurs at the building.

16.4 *Others*—Window and curtain wall systems have been developed that include one-side and three-side structural sealant glazing for a glass lite or panel. Usually these conditions

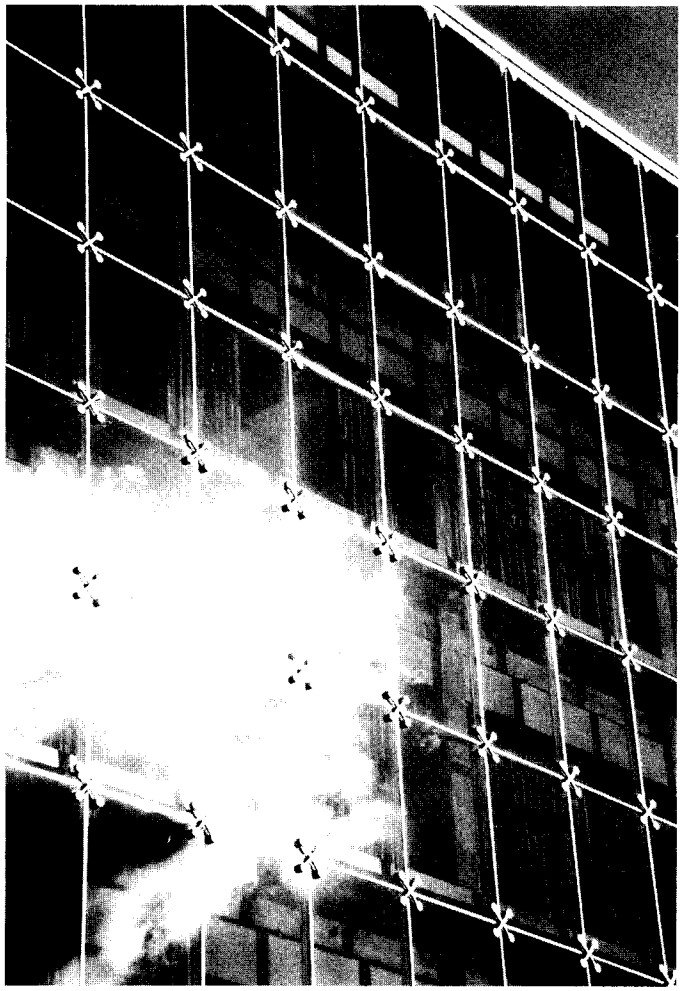

FIG. 5 Four-Side SSG System

are not typical for an entire system. Typically one- and three-side structural sealant glazing will occur at a transition area, such as a corner and where a particular aesthetic effect is desired.

16.5 *Sloped Glazing*:

16.5.1 Walls that are sloped more than 15° from vertical generally are treated as sloped glazing (Fig. 6) (**13, 14, 15**). Sloped glazing can be either inward or outward sloped, sometimes called reverse slope. If inward sloped, a compressive load is applied to the structural sealant joint due to the weight of the glass or panel. If outward sloped, a dead load due to the weight of the glass or panel exists, which creates a downward and outward force on the structural sealant joint. Sloped SSG systems conceptually are the same as vertical two- and four-side SSG systems except for the degree and direction of slope from vertical, method of water infiltration management, and structural design of glass and structural sealant for a sloped configuration (**15**). Many sloped SSG systems are two-side structural sealant systems that are construction-site glazed (**17**).

16.5.2 SSG can have an important functional role for an inward sloped glazing application. As a sloped surface becomes more horizontal, conventionally glazed horizontal purlins, with components protruding above the plane of a glass lite or panel, act as a dam, causing dirt collection and water pooling on the exterior glass surface at the sill of each glass lite. This creates an obvious aesthetic problem and causes difficult water management. By replacing a conventionally glazed purlin with a structurally glazed purlin, water can drain freely down the exterior face of a sloped system without obstruction, eliminating a water dam problem. Because of this feature, SSG purlins, with conventionally glazed rafters, have become quite common for inward sloped glazing and skylights.

16.5.3 For most structural sealant glazing, the structural attachment of a glass lite or panel is from the interior face of the lite or panel to the exterior face of a metal framing member, however, in some situations, especially sloped glazing, the structural attachment can be from the edge of the glass lite or panel to the side of a vertically projecting fin of a metal framing member. This is acceptable if the glass lite or panel and the size of the structural joint have been determined to be adequate by structural calculation.

17. Other Systems

17.1 *Butt Glazing*— Butt glazing is not a SSG system, often, though it is mistakenly referred to as a SSG system, and the term butt glazing often is incorrectly used to describe a SSG system. A butt glazed system is a two-side support system with two opposite sides of the glazed panel, usually head and sill, supported and retained in conventionally glazed framing members. The other two sides of the glazed panel are unsupported by a metal framing member and the silicone sealant at these edges acts only as a weather seal. When butt glazing a 90° outside corner, it is particularly difficult to achieve an effective weather seal. For a two-side support condition, the strength, thickness, and deflection characteristics of a glass lite or panel can become a considerably greater design problem than for a typical four-side support condition. Some glass types, such as, laminated or insulating, may not be suitable for a butt glazing application.

17.2 *Glass Mullion*— A glass mullion or all-glass system is a four-side support system utilizing monolithic glass vision lites supported by glass mullions with a structural silicone sealant at the edges of the vision lites to transfer applied loads to the glass mullions. This system features a maximum see-through capability (Fig. 7).

18. Weatherproofing Concepts

18.1 *General*—Waterproofing means protection against both water infiltration and excessive air infiltration or exfiltration. It depends in large measure on adequate provision for movement and is closely related to proper joint design. Undoubtedly, a major share of the difficulties experienced by wall and window systems has been due to a lack of adequate weatherproofing. Inadequate weatherproofing can be caused by poor system design, improper or poor quality materials, deficient workmanship, or a combination thereof. The following briefly describes typical curtain wall and window system weatherproofing concepts.

18.2 *Primary Seal*— Also know as a barrier system, this method relies on the outer-most components of a curtain wall or window system remaining permanently weathertight to act as a weather-resistant membrane. Except for certain aspects of a four-side SSG system, this concept has proven troublesome

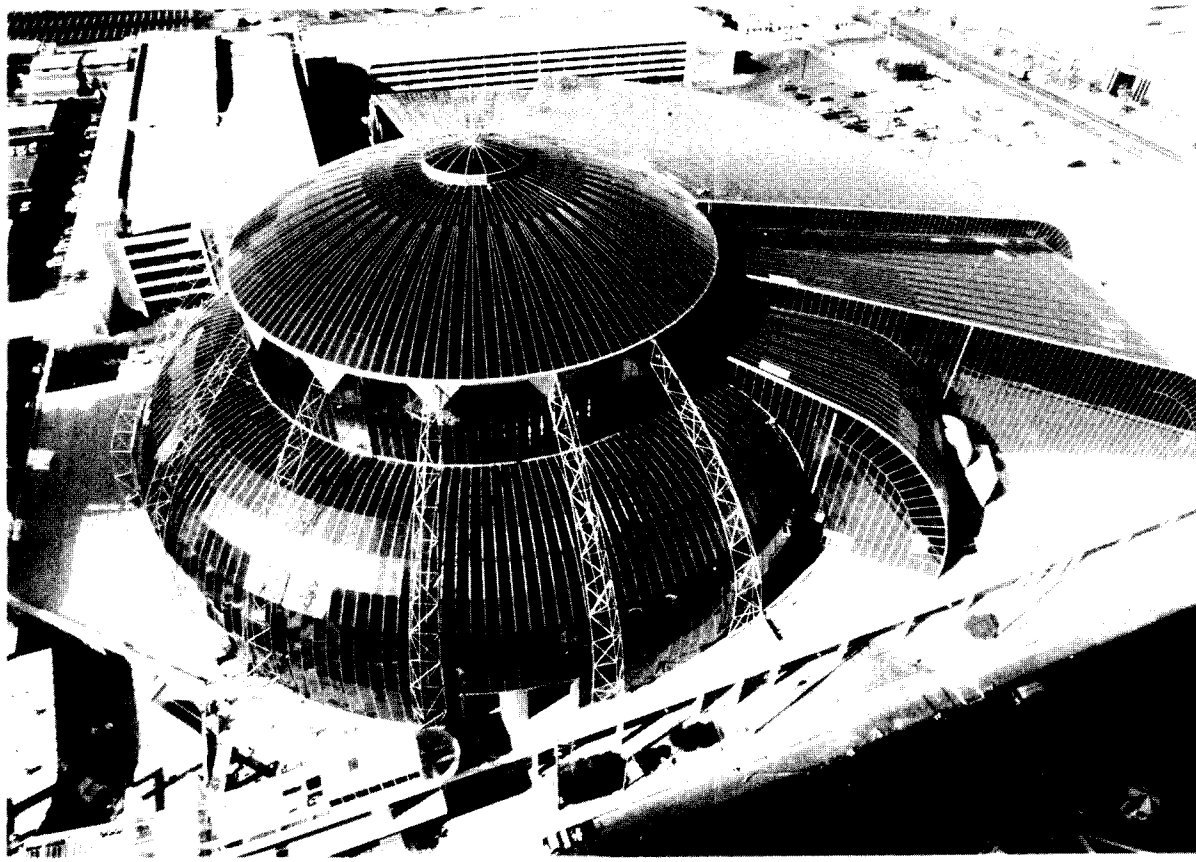

FIG. 6 Sloped SSG System

and very difficult to achieve and then maintain for the service-life of a building. Often, continual maintenance of the exterior seals is necessary to maintain a weathertight condition.

18.3 *Internal Drainage*—This concept, also known as a gutter system, is based on the philosophy that it is impractical if not virtually impossible to totally eliminate, for any length of time, leakage at all points on the exterior surface of a curtain wall or window system. Any minor leakage is controlled and prevented from penetrating to the interior of the building and can be drained back to the exterior. This concept is accomplished by providing within a curtainwall or window system a flashing and collection device, with ample drainage outlets to the exterior. This weatherproofing concept is used in many curtain wall and window systems.

18.4 *Pressure Equalization*—This concept, based on the rain screen principle, generally is a more sophisticated and complex solution but is claimed by its proponents to be effective when properly applied (**17**). In short, it requires the provision of a ventilated and baffled outer curtain wall or window surface, backed by a drained air space in which air pressure is maintained equal to that occurring exterior of the curtain wall or window system, with an indoor wall surface effectively sealed against the passage of air.

18.5 *Combinations*— Often, combinations of the above weatherproofing concepts are used for a particular curtain wall or window system design. For example, a four-side SSG system may rely on a primary seal concept for the structural sealant glazing while at a typical floor line expansion joint, it relies on an internal drainage concept.

COMPONENT DESIGN CONSIDERATIONS

19. General

19.1 The following sections generally describe the major components of a SSG system. These components are the metal framing system and various available finishes, glass types, various panel materials, structural and weather seal sealants, and accessory materials. These sections are not all-inclusive and do not describe other components that are known to be incorporated occasionally into SSG systems.

20. Metal Framing Systems

20.1 *General*:

20.1.1 SSG can be used with many different types of metal framing systems, some of which are described in the following sections. It has been used for strip windows, curtain walls, operating windows, punched openings, storefront, swinging and sliding doors and just about any other application where conventional glazing can be used.

20.1.2 The codes, rules, and methods employed in the structural design of metal framing systems for conventional glazing also are applicable to structural sealant glazing. The framing members must be compatible with the type and quality of support required for a glass lite or other panel (**18**). In general, for glass lites, the framing members should be designed to not exceed a deflection normal to the wall of L/175 between supports, with a 19-mm (¾-in.) max, and a deflection parallel to the wall of L/360, with a 3-mm (⅛-in.) max, whichever is less. When various metal, composite, or stone

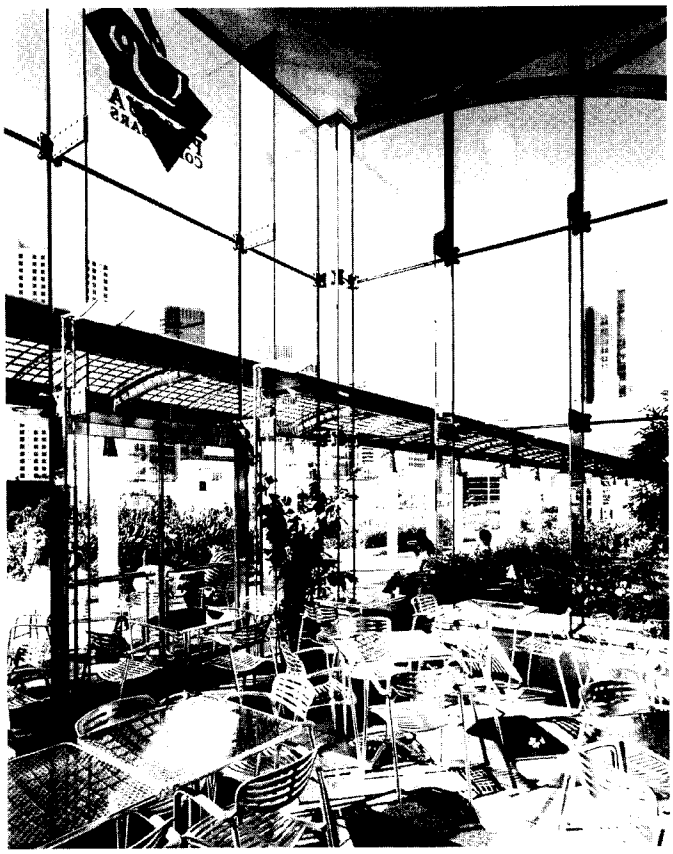

FIG. 7 Glass Mullion System

cladding panels are used, however, consideration of different, and in some cases, more stringent deflection criteria may be applicable. In addition, the framing members should not rotate unacceptably under an applied load (**18**).

20.1.3 Aluminum, steel, and stainless steel are metals that usually are considered for the fabrication of framing members. Ferrous metals, even if galvanized or painted, or both, should not be considered due to their potential to corrode with environmental exposure. The most commonly used metal is aluminum. For aluminum framing members the induced stresses should be in accordance with the Aluminum Design Manual.[8] Proper allowance for thermal and other potential building movements, as described in Section 9, must be accommodated by the framing system design.

20.1.4 The metal framing sometimes is designed to accommodate structural sealant glazing on all four sides of a glass lite or panel; however, one, two, or three sides can be retained by mechanical fastening. Also, framing can be designed for construction-site or shop glazing. Shop glazing includes the installation of glass or panels and the structural glazing sealant in a controlled interior environment. For construction-site glazing, the metal framing system is installed on the building followed by the glass lites or panels, with the structural sealant applied at the generally uncontrolled construction-site working environment.

20.2 *Stick*—A stick system is framing that is assembled piece-by piece at the construction site on the side of a building or in an opening. Glass lites of panels then are installed at the construction site. Generally, a structural sealant then is applied at the construction site unless the SSG system uses the glazing method described in 20.4.

20.3 *Unitized*—These systems are shop-glazed, in that all metal framing fabrication and installation of glazing or panels is completed before the finished units are shipped to the construction site for erection on the building. "Shop," in this context, normally is defined as an enclosed area that provides an environmentally-controlled space. Doors, operating windows, and framing for punched openings also can be designed as unitized systems.

20.4 *Preassembled*— This method combines both construction site and shop fabrication techniques. Shop glazing is accomplished using specially designed extrusions that are preassembled and adhered to a glass lite or panel with a structural sealant. The preglazed assembly then is delivered to the construction site where it is attached mechanically to a framing system that was erected at the construction site. This method is used by some curtain wall, as well as sloped glazing and skylight manufacturers. It permits the structural sealant glazing to be performed in a controlled situation.

21. Metal Framing Finishes

21.1 *General*—For structural sealant glazing, the metal framing finish is a structural part of the SSG system since the integrity of the system depends on adequate adhesion of the structural sealant to the finish, as well as the finish to the metal framing. The most common aluminum finishes for structural sealant glazing are anodized and factory applied organic coatings. These metal finishing processes can have many variations and each should be evaluated for their effect on structural sealant adhesion.

21.2 *Anodized Aluminum*—Anodizing is an electrochemical process in which a surface layer of aluminum oxide is formed on the aluminum framing member. This process produces a hard adherent coating that usually is between 0.01 to 0.02 mm (0.4 to 0.9 mil) thick. The coating can be colorless, but more often it is produced in colors, such as bronze or black, through the use of an organic acid electrolyte or a post anodizing treatment where metal salts are electrodeposited in the pores of the anodic coating. The pores of the anodic coating then are sealed by hydration of the coating or by chemical reactions within the pore structure. The different colors and sealing methods generally perform the same with respect to adhesion of a structural sealant. Sometimes, surfactants or other surface residues from a sealing bath will make it necessary to employ special surface cleaning practices or adhesion promoters, such as a primer, to obtain optimum adhesion of the structural sealant to the anodized surface (**19**). The anodized surface layer is an integral part of the metal framing surface, and therefore, there is not an issue of the adequacy of adhesion of the anodic surface layer to the aluminum. Generally, structural sealant adhesion to an anodized aluminum surface can be good. There are many variations for the anodizing process, and each should be evaluated for its adhesion characteristics relative to a structural sealant.

21.3 *Organic Coating*— Factory coated surfaces generally perform well as an adhesion surface in structural sealant glazing applications. A common factory-applied organic coating for these applications is formulated using a polyvinylidene

fluoride resin. Other coating systems using urethane, silicone polyester, and acrylic formulations also are available. With some organic coatings, a primer may be required to promote adequate adhesion of the structural sealant to its surface. A primer recommendation only can be made after completing adhesion testing with the specific structural sealant and actual finish surfaces to be used for a specific application. It is extremely important for the organic coating to be stable and durable and have adhesion to the metal framing, which can be determined using Test Method D 4541, at least as good as the adhesion of the structural sealant to the coating **(20)**. Proper metal surface pretreatment and organic coating application is critical to the performance of the SSG system since the interface between the coating and the metal surface is a critical link in the structural adhesion chain.

21.4 *Chemical Conversion Coating*—Where an aluminum framing member is hidden and not exposed to view, a chemical conversion coating, for example, a chrome phosphate, can be used to treat the surface to provide a suitable substrate for structural sealant adhesion. Generally, structural sealants develop good long-term adhesion to chemical conversion coatings. As for other surface treatments or finishes, structural sealant adhesion testing is required.

21.5 *Unfinished*—In general, an unfinished aluminum or other surface is not acceptable for structural sealant adhesion. Occasionally, it has been used after consultation with and approval by the structural sealant manufacturer, since most often it is not a reliable and consistent surface for SSG adhesion.

22. Glass

22.1 *General*—Glass is the material most often associated with a SSG system. The type of glass will play an important part in determining the aesthetics, structural integrity, and weather tightness of the SSG system. Flat glass products should meet Specification C 1036, and if heat-treated for additional strength, also Specification C 1048. The applicable building code also may have requirements that may effect glass lite design and selection. Practice E 1300 should be used to determine glass or fabricated glass product thicknesses required to resist a specified load unless the building code indicates otherwise. Reference **(21)** also provides information on the structural properties of glass. Important for proper glass performance is the quality of the glass lite. Clean cut, swiped, seamed, ground and polished glass edges can be used in SSG applications. Chipped glass edges will reduce glass strength and result in an unsightly installation. Severely damaged glass edges, with, for example," v" chips and flake chips, should not be used.

22.2 *Monolithic Glass*— Clear, tinted, and coated monolithic glass can be used for SSG applications, provided the glass lite is designed for, among others, wind load and thermal stress considerations. Monolithic glass includes annealed, laminated, spandrel, heat-treated glass, and coated glass. These products also may be incorporated in insulating glass (IG) units.

22.3 *Laminated Glass*— Laminated glass, sometimes referred to as safety glass, that is manufactured with an interlayer, typically ranging in thickness from 0.4 to 0.23 mm (0.015 to 0.090 in.), and meeting the requirements of Specification C 1172, may be used in SSG applications. Two or more lites of annealed, heat-strengthened, fully-tempered, or coated glass can be laminated together in various combinations. Consideration should be given to the compatibility of any structural and weather sealant adhering to the edge of the laminated glass, and therefore, the exposed interlayer edge. When a sealant and the interlayer are in contact with each other, and moisture is present, there is a potential for discoloration and delamination of the interlayer at the perimeter of a glass lite. As determined by testing, discoloration and delamination, in most instances, does not extend beyond approximately 5 mm (3/16 in.) from the edge of the glass. While the structural integrity of the laminated glass normally is not impaired by this phenomenon, the aesthetic appearance of these edge defects should be considered. There are no special performance requirements for laminated glass for SSG systems. Laminated glass is sensitive to the duration of an applied load, as well as exposure to elevated temperatures. Industry standard procedures should be followed for evaluating laminated glass for the duration of an applied load and the effects of thermal stress, wind, elevated temperature, and if applicable, snow load.

22.4 *Spandrel Glass*— Spandrel glass is available with a fired-on ceramic frit coating, an adhesively applied plastic film, or a silicone-based paint coating. Frit-coated glass is used for structural glazing applications provided the sealant will adhere to the frit coating as verified by the structural sealant manufacturer. The structural sealant manufacturer should provide specific cleaning, and, if required, priming recommendations for approval by the glass manufacturer for those areas of sealant contact prior to cleaning the glass and application of the structural sealant. An opacified spandrel using an adhesively applied organic film also is used for a SSG application provided the film and its adhesive is deleted from the area where a structural or weather sealant is to be applied. All opacifier film adhesive residue on the glass surface must be removed using the cleaning recommendations of both the glass and sealant manufacturers. Opacified spandrel glass that has a factory-applied silicone paint can be used for a SSG application. As for film opacified spandrel glass, the silicone paint coating should be deleted where the structural sealant will be adhered. Due to heat build-up in spandrel glass that has a solar exposure, the glass must be heat-strengthened to resist thermal stress breakage. Additionally, the lite must be tempered or laminated fully to conform to safety glazing code requirements where applicable.

22.5 *Insulating Glass*:

22.5.1 An IG unit, sometimes referred to as a double glazing unit, can be used for a structural sealant glazing application provided that it conforms to the guidelines described in Guide C 1249. This guide provides information on, among others, IG unit edge seal components; structural design of the edge seal using Test Method C 1265; compatibility issues of the IG unit edge seal with other sealants using Test Method C 1294; adhesion of the edge seal secondary sealant; issues known to affect edge seal durability; and a discussion of quality assurance considerations for the edge seal system. The secondary

sealant of an IG unit edge seal should meet the requirements of Specification C 1369 when used as part of a SSG system.

22.5.2 There are structural glazing sealants, which are acceptable for use when glazing a monolithic lite of glass, but are not suitable for use with an IG unit that is suitable for SSG. Compatibility of sealants and other materials with the IG unit edge seal should be verified by Test Method C 1294 and attested to by the sealant manufacturer and IG unit fabricator prior to use.

22.5.3 Testing has been performed to determine the effect of an applied lateral load on an IG unit edge seal, in particular with simulation of a negative wind load (**22, 23**). This testing indicated that the edge seal experiences mostly normal strains due to the out-of-plane displacement and rotation of the inward facing lite of the IG unit and a change in edge seal shape resulting mostly from a shearing action due to the rotating lites of the IG unit. Additionally, testing also has been performed to simulate the effects of varying IG unit edge spacer shapes while experiencing a static load (**24**). This testing determined that there can be an increase in strength of the edge seal with three-side adhesion of the secondary sealant to the spacer as the depth of the edge seal increases. Additionally, the shape of the spacer had an effect on the strength of the edge seal.

22.5.4 If an IG unit is used in an outward sloped SSG system, an evaluation of the design of the IG unit edge seal should be performed for this condition. The constant dead load of the exterior lite of the IG unit may change the ratio of load sharing between its interior and exterior lites. Additionally, the constant dead load also may create stresses on the edge seal that can affect the service life of the hermetic edge seal of the IG unit.

22.5.5 The hermetic seal of an IG unit has a definitive life-time. Replacement of the IG unit will be required at some time in the future. The SSG system must be designed to permit reglazing easily and adequately to replace IG units that have reached their effective service life.

22.5.6 Heat-treating of one or both lites of an IG unit may be required to adequately resist thermal breakage or wind load. Additionally, one or both lites may have to be fully tempered or laminated to conform to safety glazing code requirements where applicable.

22.6 *Heat-Treated Glass*:

22.6.1 *General*—Both heat-strengthened and fully tempered glass can be used for structural glazing applications provided any bow, warp, wave, and kink characteristics caused by the heat-treating process do not cause an oversized or undersized structural sealant joint beyond the limits established for it. The glass should be heat-treated according to Specification C 1048. Both types of heat-treated glass can be manufactured by a horizontal or vertical process. If a vertical process is used, tong marks, which could be considered objectionable, will be seen close to one edge of the glass. If a horizontal process is used, visual distortion known as roller wave may be introduced, which visually could be objectionable under certain viewing conditions. Both types also may have a visible strain pattern that is viewable under certain lighting conditions and that becomes more visible with thicker glass. Since the heat-treating process can introduce visual distortion into the glass, construction of a full size mock-up is highly recommended to view the aesthetic characteristics of the heat-treated glass.

22.6.2 *Heat-Strengthened Glass*—This glass will have a surface compression of not less than 24 MPa (3500 psi) or greater than 52 MPa (7500 psi) after heat-treating. Similar to annealed glass when broken, relatively large sharp shards will result that can be hazardous.

22.6.3 *Fully Tempered Glass*—This glass, sometimes referred to as toughened or safety glass, will have a surface compression of not less than 69 MPa (10000 psi) and an edge compression of not less than 67 MPa (9700 psi) or will meet ANSI Z97.1 or CPSC 16CFR 1201. When broken, many relatively small glass pieces or clusters of small pieces will result that reduce the likelihood of serious glass related injuries. Fully tempered glass, due to impurities that infrequently occur in the glass melting operation, can be susceptible to a spontaneous breakage condition caused by a nickel sulfide stone inclusion. Use of fully tempered glass in nonbuilding code mandated areas should be evaluated for the potential impact and liability of spontaneous breakage.

22.7 *Chemically Strengthened Glass*—Annealed glass is submerged at high temperatures in a bath of molten potassium salts. A thin surface compression layer is induced in the glass by exchanging sodium ions in the surface layer with larger potassium ions. This process strengthens the glass without introducing visible distortion. Chemically strengthened glass is not a safety glass. If broken, it fractures like annealed glass. Presently, this glass is relatively expensive since it is made in small batch quantities. Generally, except for security glazing laminated glass and other glass products requiring increased strength, flatness, and visual fidelity, chemically-strengthened glass is not used in building construction. If chemically-strengthened glass is contemplated for a SSG application, then an evaluation and testing program should be implemented to at least verify its availability and suitability as a substrate for structural sealant adhesion.

22.8 *Coated Glass*:

22.8.1 *General*—A coated glass, such as reflective or low emissivity, may be used for a SSG application provided the structural sealant manufacturer verifies adhesion of the structural sealant to the glass coating, and the glass coating manufacturer verifies that the coating is suitable as an adhesion surface for the structural sealant for a SSG application. The sealant manufacturer should provide specific cleaning, and, if required, priming recommendations, which also are approved by the glass coating manufacturer, for preparing the coated glass surface for application of the structural sealant. Some coatings are not suitable for structural sealant adhesion. In such instances, the coating is removed from the glass surface, generally called edge deletion, where structural sealant adhesion will occur. Edge deletion can be by abrasion of the glass surface or by use of a flame to burn the coating off the glass surface. If edge deletion is used, the resulting glass surface should be verified as suitable for structural sealant adhesion. As with tinted glass, heat-strengthening may be required to resist thermal breakage or wind load. Additionally, the lite may have

to be fully-tempered for safety glazing code requirements where applicable.

22.8.2 *Coating Processes*—In general, both a pyrolitic coating and magnetic sputtered vacuum deposition (MSVD) coating process can be used to provide a reflective or low emissivity (low-E) coating on a glass surface. A pyrolitic coating is applied onto the still hot glass surface during glass manufacturing, and therefore, becomes integral with the body of the glass. In general, structural sealants have the same adhesion characteristics to this coated glass as they do to an uncoated glass. An MSVD coating is applied at room temperature in a vacuum chamber after the glass lite has been fabricated to size and the coating is not integral with the body of the glass as with a pyrolitic coating. As previously indicated, edge deletion may be required for some MSVD coatings where structural sealant adhesion to the coated glass surface is necessary.

22.9 *Other Glass Products*—Decorative forms of glass lites, for example, cast, wired, sand-blasted, acid-etched, and silk-screen painted have been used successfully in a SSG system. Their use is predicated on suitable analysis of glass lite strength for the application and confirmation by testing of achieving adequate structural sealant adhesion to the glass surface.

23. Panels

23.1 *General*—There are many different types of panel materials, other than glass, that could be considered for a SSG application. It is beyond the scope of this guide to list and describe the many panel types and variations that currently are available, some of which may not be suitable for a SSG application. The SSG system designer should consider carefully the use of a panel material other than glass to ensure that the chosen panel will have the necessary performance characteristics for use in a SSG system. The manufacturer of the panel also should be involved in the design and development of the SSG system and should agree to the use of his product in this application. As for a glass panel, these other panel materials should have the required strength and deflection characteristics for the application and should provide an acceptable, sound, and durable surface for adhesion of the structural sealant. They also should have the requisite durability for exterior use when considering weathering and other effects on the panel material. The following sections will describe briefly metal, composite, and natural stone panels.

23.2 *Metal*—Metals that are used commonly for window and curtain wall panel construction include aluminum and stainless steel. Aluminum for a panel surface can be supplied in the form of sheet, plate, or cast metal. The sheet and plate forms usually are attached mechanically to an aluminum extrusion around their perimeter. Stainless steel usually is supplied as a sheet material that then is formed and usually welded. Aluminum faced panels will have a surface finish that is either anodized or coated with a factory applied, baked-on organic finish. The concerns addressed in Section 21 relative to structural sealant adhesion to the aluminum surface finish also apply to this panel type. Stainless steel for exterior use should be from the 300 series of alloys to provide corrosion resistance. Stainless steel surface finish can vary from one that is highly polished to textured with color varying from a natural metal to almost black. Stainless steel can present a surface for structural sealant adhesion that can be problematic. Prior to substantial system development, the SSG system designer should verify by testing, that includes both the structural sealant and panel manufacturers, that adequate adhesion can be obtained. Depending on size and lateral load, these panels can be reinforced on their interior facing surface with stiffeners, extruded aluminum or cold or hot formed shapes, that are either structurally adhered or mechanically attached by welding to the panel material. These panels then can be insulated with conventional insulation materials either in a factory setting or at the construction site.

23.3 *Composite*—These panels often are of a laminated construction. Exposed exterior facing materials can be the previously described aluminum and stainless steel sheet and plate, as well as porcelanized or otherwise factory coated steel, and thin stone veneer, among others. The panel core construction usually is a rigid insulating material or a honeycomb structural core. An interior facing material often is applied to create a balanced panel construction. The long term durability of these panels, which usually are laminated together with various adhesives, is a primary concern. Additionally, they should provide an appropriate surface for structural sealant adhesion. Typically, these panels have an edge construction that exposes the core material, which, for structural sealant glazing, may need to be closed off by wrapping the panel facing around the edge. The SSG system designer should verify by testing, that includes both the structural sealant and panel manufacturers prior to substantial system development, that the panel will have appropriate durability, in particular for the various adhesive bonds used for panel assembly, and that adequate structural sealant adhesion can be obtained to the panel surface.

23.4 *Natural Stone*— Natural stones that could be considered for use as an exterior cladding material in a SSG system include granite, limestone, and marble. These stones should meet at least the minimum requirements of Specifications C 615, C 568, and C 503 respectively, as well as industry recognized natural stone design procedures for coefficient of variation and safety factor based on Test Methods C 99 and C 880. Natural stone may not be appropriate for structural sealant attachment in an exterior application. The long-term adhesive relationship of the structural sealant to the stone surface must be verified, particularly when considering the effects of, among others, water immersion, freeze-thaw cycling, and heat aging. Equally important to success are determining the natural stone's properties and any potential changes that could occur with time that would have an effect on structural sealant adhesion. The particular structural sealant and natural stone combination should be tested and verified before stone is purchased for an application. Structural sealant attachment of natural stone has some advantages over conventional noncontinuous kerf mechanical attachment that creates a localized point loading condition. Primarily, it permits uniform distribution of wind load stress for the entire perimeter of a stone panel, rather than at localized mechanical anchorage points, which minimizes the potential for stone cracking and failure associated with concentration of those stresses (**25**).

Natural stone panel attachment using only a structural sealant may not be desirable in some applications due to the limitations of a structural sealant in a fire situation, wherein failure of the sealant could result in detachment of a stone panel from a building. A combination of a structural sealant with supplemental mechanical attachment could be considered as a more reasonable approach to secure natural stone (**26**).

23.5 *Plastic*—Organic materials, such as a polycarbonate or acrylic sheet, have been used in SSG systems. To be successful, long-term adhesion of the structural sealant to the plastic surface should be verified by laboratory testing with appropriate weathering factors included, such as, ultraviolet radiation, heat, and water. The structural sealant adhesion to the organic surface must be suitable for a long-term application. Primers that may be required to enhance structural sealant adhesion, depending on the type of solvents in the primers, may cause stress related crazing of the organic material surface. A primer, if required, should be as recommended by the structural sealant manufacturer. Additionally, plastic panels have approximately eight times more thermally-induced dimensional change than a glass lite. The differential thermal movement between a plastic panel and a metal framing system must be considered adequately for the secondary shear stress that is induced in the structural sealant joint. Lastly, most organic materials are limited in use by the applicable building code when considering the material's performance in a fire situation.

24. Structural Sealants

24.1 *General*—The proper selection and use of a structural sealant for a specific SSG system application must be carefully considered (**27, 28**). A structural sealant for a SSG application must comply with the requirements of Specification C 1184. At this time, only a silicone sealant formulated for SSG applications, and recommended by the manufacturer for structural use, is acceptable and will comply with Specification C 1184. Presently, Specification C 1184 requires a structural sealant to develop a minimum of 345 kPa (50 psi) tensile strength after exposure to standard conditions of 23 ± 2°C (73.4 ± 3.6°F), air temperatures of 88°C (190°F) and –29°C (–20°F), water immersion for seven days, and 5000 h exposure in a weathering machine. Many colors, including clear, have been used successfully for SSG work; however, it is good practice to use a pigmented sealant with black being the most generally used. A clear structural sealant generally is not advisable since it has no pigment to block ultraviolet radiation from passing through the sealant and reaching the adhesion surface where it may affect the long-term stability of the substrate finish, and thus, adhesion of the sealant. Once a structural sealant(s) is chosen and specified, based on at least successful completion of adhesion and compatibility testing, a substitution should not be made, without verifying for the substitution at least the same information just described. No two structural sealants, even from the same manufacturer, can be assumed to be equivalent for a given application. If more than one structural sealant will be used for an application then both sealants must meet the specified criteria for the application. A situation where typically this is encountered is when a multicomponent structural sealant is used for shop glazing and a single-component for repair and replacement at a construction site. A structural sealant must be used within its manufacturer established shelf-life. Also, a sealant's shelf-life strongly depends on its storage conditions, especially, temperature. Most structural sealant manufacturers require that a single-component sealant or the components of a multicomponent sealant be stored at a temperature below 27°C (80°F). An out of self-life structural sealant or one stored at elevated temperatures may have significantly altered properties that could affect its curing, adhesion, and ultimate durability.

24.2 *Types*:

24.2.1 *Single Component*— A single-component structural sealant requires no mixing, which is advantageous since it eliminates a mixing process, which could introduce the chance for a mistake to occur. The sealant, after application in a joint, uses the water vapor from the atmosphere for its curing process. The rate of cure, which can approach 21 days to complete satisfactorily, is dependent on the quantity of water vapor in the atmosphere and to a lesser extent, the ambient temperature. The thickness of depth of a structural sealant joint is important since a single-component structural sealant will cure from its atmospherically exposed surface(s). The water vapor then must permeate the surface cured sealant material to reach the uncured sealant beneath and complete the curing process. Moisture curing structural sealants take time to complete the curing process, and therefore, it is advisable to verify with the sealant manufacturer the recommended sealant cure times for various environmental and use conditions. A single-component structural sealant is available as a medium or high modulus formulation. A low modulus sealant has been used in one instance for a specialized SSG application, only after completion of a testing and evaluation program developed for that specialized application. Single-component structural sealants are available with several different curing systems. An acetoxy structural sealant will produce acetic acid as a byproduct during the curing process. As a result, this sealant usually is not used where the acetic acid fumes will contact the edge seal of an IG unit that has a multicomponent silicone secondary sealant. The fumes can permeate the secondary sealant of the IG unit and cause it to loose adhesion to the glass. This effect will cause fogging of the IG unit, and importantly for SSG applications, a change in the IG unit response to lateral load, resulting in deficient load carrying capability. It is recommended that a neutral cure structural sealant be used whenever this potential condition could occur. Additionally, acetic acid also could react detrimentally with some metals or metal finishes.

24.2.2 *Multicomponent*— A multicomponent structural sealant, usually consisting of two components, commonly is used for SSG applications. These sealants usually are of relatively high strength and high modulus and are made by mixing the two measured components together immediately prior to use. These sealants normally are used in a factory or shop glazed application and can provide a relatively rapid cure rate. Depending on the two component mixing ratio, a multicomponent structural sealant can take only a few hours or up to two or three days to cure. This is an advantage over a single-component structural sealant that can take many days to achieve adequate strength to permit, for example, moving of

shop glazed assemblies. Shop glazed assemblies using a multicomponent structural sealant can be moved, crated, and shipped in a short period of time. Shop glazing presently is required for a multicomponent structural sealant since metered mixing equipment is necessary, which is heavy, bulky, and not portable.

24.3 *Properties*:

24.3.1 *Tensile Strength*— A structural sealant should have a minimum ultimate tensile strength of 345 kPa (50 psi) as determined by Test Method C 1135. This is a laboratory method that determines tensile strength based on small samples of a sealant profile more indicative of the shapes used for structural joints in SSG systems; however, if there is concern as to the ability of a particular joint design or shape to develop the required ultimate structural sealant strength or other performance criteria, a small scale mock-up testing program can be performed to establish appropriate design values (**4**). Most structural sealants have an ultimate strength in excess of the 345 kPa (50 psi) min; however, that does not imply that a design tensile strength higher than the industry standard of 139 kPa (20 psi) should be used. There are few cases, if any, that warrant an increase in the design tensile strength. With a SSG application, a primary concern is maintaining adhesion with environmental exposure for the life of the installation. To assist in maintaining adhesion, when experiencing any lateral- or gravity-induced load, it is desirable to have a low sealant stress and therefore a low stress at the sealant adhesion area.

24.3.2 *Shear Strength*— The ultimate shear strength of a structural glazing sealant usually will equal or exceed its tensile strength. This statement, in general, has been proven for sealants. Experimental work suggests that a sealant's shear stress is equal to or less than the tensile stress at the same elongation, and therefore, a sealant's tension modulus properties when used in conjunction with a Pythagorean Theorem can be used to calculate conservatively a sealant's shear movement (**29**). Shear strength and shear movement is of concern when a structural sealant is adhered to the edge of a glass panel or to a projecting fin of a supporting framework, usually for a sloped glazing application. In this configuration, the structural joint must have the same general strength and modulus considerations as are performed for a structural joint experiencing tensile stress. It is highly desirable to have a stress/strain plot created for a particular structural sealant in a shear configuration based on using Test Method C 1135. With this plot, and knowing the expected lateral and other loads, it is relatively easy to determine the joint's strength and deflection properties in a shear mode.

24.3.3 *Movement Capability*—A structural sealant joint will have to accommodate differential thermal movement, as well as lateral load induced movement, that will occur between a glazed panel and its supporting framework. A glazed panel will be cooled or warmed by ambient conditions, as well as warmed by direct solar radiation. The supporting framework, primarily being on the interior of a building, will have its thermal movement moderated by the interior conditioned environment. Typically, differential thermal movement creates a shear stress in a typical structural joint, reaching a maximum at or near the panel corners. Obviously, the larger the panel and the greater the thermal gradient the larger the movement will be. Lateral wind forces in a negative direction, tending to pull the glazed panel off the building, also will generate movement in a structural sealant joint. This movement creates a tensile stress in a typical structural joint. The larger the glazed panel and the larger the expected wind load, the greater the potential movement. A structural sealant's movement capability must be considered in conjunction with its strength and modulus characteristics.

24.3.4 *Modulus*—Low, medium, and high modulus sealants all have been used in SSG applications, with a low modulus sealant only being used after very careful consideration. Modulus for structural glazing typically refers to a secant modulus and most often is stated as a force or stress at a given elongation or strain. For a particular SSG application, a maximum modulus value is determined so that the structural sealant will not be so stiff that any expected differential movement it will experience will generate sealant forces greater than its allowable design stress. Also, a minimum modulus value is determined so that the structural sealant will not be so flexible as to allow unacceptable movement, thereby permitting a glass lite or panel to move off setting blocks or supporting fins. Research and testing has been performed that also indicates that the modulus of a structural sealant may change with time after its installation in a SSG system (**30**). Appendix X1 in Specification C 1184 provides a discussion, with calculation examples, of structural sealant modulus considerations. When a structural sealant joint's dimensions are fixed or restricted determining the maximum and minimum modulus values by calculation is important to determine if the structural sealant is appropriate for the application. Sometimes with established joint dimensions, a sealant may be too high or low in modulus and a change in the structural sealant should be made to keep the generated forces and allowable movements within acceptable limits.

24.4 *Accessories*:

24.4.1 *Cleaning Material*—The quality of a cleaner is as important as the quality of a sealant. For SSG applications, quality considerations are not limited to the major components of the system, but also include cleaning agents and cleaning cloths, among others. The surfaces to which a structural sealant will be applied must be cleaned properly. Any deleterious substances, such as oil, grease, or powdery deposits, that may interfere with adhesion, must be removed completely. Degreasing solvents, such as methyl ethyl ketone (MEK), toluene, xylene, acetone and mineral spirits have been used as cleaners. Many of these solvents are regulated due to their hazardous nature and volatile organic compound (VOC) content. It is necessary to know the environment and safety provisions for a specific application before a particular solvent is selected for evaluation. Some solvents that may be considered appropriate for use are effective degreasers but can leave a residue film on the cleaned surface, which should be removed. A residue film can be removed using a solution of 50 % isopropyl alcohol (IPA) and 50 % water. This solution is not an effective degreaser. Sometimes a two-step cleaning method is used. The first step is a solvent, which is a degreaser, followed by the second step, which is a solution of IPA and water, to remove

any residue film. The structural sealant applicator should work closely with the structural sealant manufacturer, substrate finish applicator, and cleaning agent manufacturer to devise a suitable cleaning procedure as determined by testing. When received at a shop or construction-site, and prior to use, a cleaning agent should have its quality verified by testing by an independent laboratory. Small quantities of organic and other contaminates in the shipped cleaning agent can adversely effect adhesion of the structural sealant to a cleaned surface. Cleaning cloths or wipes also must be free of contaminates and be lint free. Some commercially available disposable cloths or wipes contain additives, such as lanolin, to improve softness. These additives will contaminate a surface and affect structural sealant adhesion.

24.4.2 *Surface Conditioner*—Sometimes a structural sealant may require the application of a surface conditioner or primer to achieve acceptable adhesion performance. A primer, if required, normally is furnished by the sealant manufacturer and is formulated for use only with their sealants. A primer from one sealant manufacturer should never be used with a sealant from another manufacturer. Some structural sealant manufacturers have several primers that are designed to be used with their different structural sealants and with different substrates. Selection of a primer for use with a particular structural sealant and substrate finish should be the responsibility of the sealant manufacturer based on data obtained from testing performed on submitted substrate finish samples. As for sealants, a primer must be stored and applied in accordance with the manufacturer's recommendations and used within its stated shelf-life.

25. Nonstructural Sealants

25.1 *Weatherseal Sealants*—A weatherseal sealant for a SSG application must comply with the requirements of Specification C 920. At this time, only a silicone polymer based formulation is used for a structural sealant, and therefore, the weatherseal sealant also should be of a silicone formulation to minimize any adhesion and compatibility concerns between the two sealants. Typically, the weatherseal is the first line of defense against water and air infiltration through a window or curtain wall system; therefore, the weatherseal should receive the same degree of evaluation during design and testing as a structural sealant, to verify its performance for its application. The adhesion surface for a weatherseal sealant typically is an edge of a glass lite, IG unit edge seal or other panel, as well as, an edge or face of an aluminum framing member. Typically, adhesion and compatibility of a weatherseal is verified using Test Methods C 719 and C 794 for adhesion, and Test Method C 1087 for compatibility. Various types of movement, for example, thermal, seismic, and wind induced, as well as material, fabrication, erection, and framing system tolerances will have to be accommodated by a weatherseal joint. Weatherseal joints include those that occur between various cladding components, and usually, at each or every other floor in multistory construction. A weatherseal joint at each floor is referred to colloquially as an expansion joint. For proper performance and durability, a weatherseal joint must be designed for the movements and tolerances that typically occur at these joints (**31**).

25.2 *Framing System Sealants*—Various types of sealants typically are used to seal joints internal to a SSG application framing system. For example, internal drainage mechanisms, often called gutters, frequently are sealed watertight using sealants based on silicone, butyl, or acrylic polymers. These same sealants also are used to seal other joints or openings to limit air exfiltration or infiltration. Where these sealants can contact or have an effect on an installed structural glazing or weatherseal sealant, they must be tested and proven to be compatible.

26. Accessory Materials

26.1 *General*—A variety of accessory materials, such as spacers, gaskets, setting blocks, tapes, and different types of sealant backing, may be placed in direct or incidental contact with a structural glazing sealant. Each of these accessories has a function in a SSG application. Accessory materials should be tested and approved by the structural sealant manufacturer as appropriate for use with the structural glazing and other sealants prior to any SSG system assembly testing or fabrication. No material substitutions or formulation changes should occur after testing confirms adequate compatibility and, where required, adhesion. If a substitution has to be made, then the testing will have to be repeated. Compatibility testing is performed using Test Method C 1087. Some extruded accessories can have a coating of a powdery substance or other material surface film. These materials can interfere with adhesion of a sealant to the surface of an accessory or can contaminate other adhesion surfaces. This should be considered during the testing process. The following sections briefly describe typically used accessories.

26.2 *Spacers*—When using glass in structural sealant glazing, a spacer is used to provide, among others, a continuous temporary cushioned support for the glass prior to application and curing of the structural sealant and assists in creating and maintaining a properly sized opening to receive the structural sealant. There are a wide variety of structural sealant glazing system joint designs and almost every type of spacer material that is used for conventional glazing has been used for a structural sealant glazing application. Typical materials include vinyl and other types of foam tapes, mastic glazing tapes, both sponge and dense elastomeric rubber and vinyl extrusions, and thermoplastic rubber extrusions. There are three primary methods used to retain a spacer in place. It can lock-in-place on a surface, be friction-fit between surfaces, or be adhered to a surface(s). A lock-in-place spacer has a specially formed leg or protrusion that is designed to lock into a similarly shaped groove or pocket in a metal framing system member. A lock-in-place spacer provides precise location control to create the required size of opening for a structural sealant joint. A friction-fit spacer is used with construction-site glazing of glass and is designed to be installed after the glass is in place on the metal framing system. This spacer is the most difficult to install properly because it must be inserted between the glass and metal framing surfaces only as deep as the structural sealant joint design requirement. Some metal framing members are extruded or fabricated with a stop to assist in proper alignment of the spacer. Additionally, any bow or warp that occurs with the glass or metal framing can eliminate or diminish the pressure required to hold a friction-fit spacer in place. A

pressure sensitive adhesive (PSA) can be applied to one or two surfaces of a spacer. A spacer with one PSA surface usually is adhered to the metal framing system surface. A spacer with two opposite sides with a PSA generally is adhered first to the surface of the metal framing system, with a glass panel subsequently adhered to the other spacer surface. The two-side PSA spacer provides a temporary support to retain the glass in place until the structural sealant has sufficiently cured for a shop glazed application. It is important to keep in mind that a spacer with a PSA on two surfaces generally is not designed to function as a temporary retainer, to hold the glass in place during structural sealant curing, for a construction-site glazing application.

26.3 *Gaskets*—A compression seal and wedge gasket can occur at one or more edges of a glass lite in a SSG application. Both gaskets will occur most typically at the head and sill and terminating jambs of a two-side SSG application. Generally, these gaskets are formulated from chloroprene (neoprene) and ethylene propylene diene monomer (EPDM) rubbers that meet Specification C 509 for a compression seal gasket and Specification C 864 for a wedge gasket. These gaskets also could be fabricated from a silicone rubber. Thermoplastic gaskets recently have become available; however, obtaining silicone sealant adhesion to the surface of a thermoplastic gasket is very challenging and difficult to achieve in those applications where adhesion is required. These gaskets should have the same level of performance as would be expected for a conventional glazing system. The gaskets should be designed so that when installed, the interior gasket maintains the interior glass lite surface in plane with the structural sealant joint spacer that occurs where there are no gaskets. Both gaskets must be compatible with the structural and weatherseal sealants for incidental contact between the gasket and the sealant. For best performance, the weatherseal sealant should have acceptable adhesion to the exterior gasket surface to maintain system weather tightness. Other than for glazing, gaskets such as sweeps, air seals, and expansion joints can occur integral with a SSG system or at its periphery as a transition between building systems. These gaskets also should receive the same degree of consideration for compatibility and adhesion issues as for a glazing gasket.

26.4 *Setting Blocks*— Setting blocks for a SSG application perform the same function as for conventional glazing, that is, they support the dead load of a glass lite or other panel type. Typically, setting blocks can be made of a silicone, neoprene, or EPDM rubber that meets Specification C 1115 for silicone and Specification C 864 for neoprene, or EPDM, and has been proven by testing to be compatible with the sealants proposed for use in a SSG application. For a two-side SSG application where a horizontal sill or intermediate horizontal framing member is glazed conventionally, a typical setting block arrangement is used. For a four-side SSG application, or where structural glazing occurs at horizontal framing members that have setting blocks, the setting block arrangement is different. To maintain a neat and flush weatherseal sealant appearance, the exterior face of the setting blocks must be set back from the exposed sealant face. To maintain adequate dead load support for a glass lite or panel, the set back should be no more than one-half the thickness of the supported lite or panel. For an IG unit, the setting blocks should be set back no more than one-half the thickness of the outermost lite of the IG unit. At these horizontal framing members, a shelf is provided for full support of the setting blocks. The setting blocks can be in contact with the structural and the weatherseal sealants. Whenever there is contact, the setting block should be made of a material that is compatible with both sealants. Also, the setting block material must be compatible with the secondary edge seal of an IG unit and the plastic interlayer of a laminated glass lite.

26.5 *Sealant Backing*:

26.5.1 *General*—Compressible sealant backing materials often are used in SSG systems, primarily as a weatherseal sealant backing for joints that occur; for example, between glass lites and IG units, at floor line expansion joints, and other similar conditions. Sealant backing should meet the requirements of Specification C 1330. Normally, they are not used as a substitute for the various spacer materials described in 26.2. Sealant backing compatibility with the sealants with which it is proposed to be used, should be verified by Test Method C 1087. If the sealant backing is to be used in a joint that will experience movement, then the sealant backing should not cause or contribute to a three-side adhesion condition that would compromise the sealant's performance. Materials that are used commonly for sealant backing include polyurethane, polyethylene, and polyolefin. These materials are fabricated or extruded into sealant backing that can have an internal cellular structure that is composed of open cell material, closed cell material, or a combination of both.

26.5.2 *Open Cell*—An open cell sealant backing normally is made from a polyurethane material, which is fabricated into various size cylindrical, rectangular, or other shapes that do not have a surface skin. Due to its open cell structure, this sealant backing has a low density and is easily compressible into place; however, the open cell structure tends to retain and can wick water that may infiltrate behind the sealant joint or through other system deficiencies. The use of an open cell sealant backing should be evaluated carefully so that the possibility of a water saturated sealant backing in direct contact with a structural sealant glazing joint is precluded.

26.5.3 *Closed Cell*— A closed cell sealant backing normally is made from a polyethylene material, which usually is extruded into various size cylindrical shapes that have a surface skin. Due to its closed cell structure, this sealant backing has a low density and is less easily compressible into place then an open cell sealant backing. The closed cell structure, however, tends to not retain or wick water that may infiltrate behind the sealant joint or through other system deficiencies. If proper workmanship is not employed during installation, however, the surface skin of the backing can be punctured and with environmental heating the backing outgasses into the uncured sealant producing bubbles and other defects in the cured sealant. This condition can result in water infiltration and compromise the ability of the sealant to accommodate movement. The sealant backing can be tested for its out-gassing potential by Test Method C 1253.

26.5.4 *Bicellular*—This sealant backing normally is made

from a polyolefin or polyethylene material, which usually is extruded into various size cylindrical shapes that have a surface skin. It has a cell structure composed of both open and closed material. Due to its cellular structure, it has the water absorption characteristics primarily of a closed cell sealant backing; however, cut ends of the sealant backing can retain water. Due to its combination of open and closed cells, if the surface skin is punctured, this backing will not outgas into an uncured sealant. The skin can winkle or fold over, however, when installing the backing into a joint opening if it is not sized properly for the opening or installed correctly.

26.6 *Bond Breaker*— A bond breaker normally is a self-adhesive tape, usually made from a TFE-fluorocarbon or polyethylene material, to which a sealant will not develop adhesion. A bond breaker normally is not associated with a structural sealant glazing joint; however, it is used typically at a weatherseal joint, where due to dimensional constraints, a conventional sealant backing cannot be used. A bond breaker has very low or no adhesion to a sealant thereby avoiding a three-side adhesion condition, which is detrimental to proper sealant movement. If a bond breaker tape is required for a SSG application, its compatibility with and lack of adhesion to a sealant, must be confirmed by testing.

STRUCTURAL SEALANT DESIGN CONSIDERATIONS

27. General

27.1 *Sealant Selection*—The selection and use of a structural sealant for a particular application will depend on several criteria. The sealant must meet the requirements of Specification C 1184 as generally described in Section 24, must be compatible with materials and other sealants with which it is in contact, must develop adequate adhesion to its substrates, must have an appropriate design factor, and must have ultimate and design strengths suitable for the application. The following generally describes considerations for use in establishing these criteria.

27.2 *Compatibility*— Compatibility always should be investigated, never assumed. There are no" always compatible" combinations of sealants with other materials. Sealants for structural and weather seals should be tested for compatibility amongt themselves and with materials and finishes they contact or are in close proximity. Materials and finishes, with time and exposure to the ultraviolet component of sunlight, can exude or release plasticizers or other materials into a sealant, which can cause a sealant to change color or lose adhesion. Also, these accessories can have surface residues or contaminants from manufacturing that can migrate into the structural sealant. A change of color is evidence of a potentially detrimental chemical reaction, and although adhesion may not be initially lost, the color change could be predictive of a future loss of adhesion. Other structural sealant characteristics that also could be affected by incompatibility with an accessory include the sealant's ability to fully cure, are its ultimate strength development and its aesthetic qualities. Compatibility testing is described in 34.3.

27.3 *Adhesion*—Structural sealant glazing is *adhesion*. Obtaining and then maintaining long-term adhesion of a structural sealant is the primary variable in a successful installation (**19, 32, 33**). Sealant manufacturers usually determine what is necessary to achieve adequate adhesion, and if a primer or surface conditioner is necessary, by using the test methods described in 34.4. In some applications, glass, metal, or other adhesion substrates may have coatings, surface treatments or difficult to remove contaminants that require special cleaning techniques or primers. Due to this surface variability, the adhesion substrates should be sampled and tested from actual production runs as described in 36.1. To monitor for any surface changes during material production runs or system fabrication or installation, consideration should be given to evaluating substrate adhesion at the beginning, periodically during, and at the end of the material's production run and its incorporation into the system during fabrication or installation. Consideration should be given to identifying a sealant, which, if possible, will provide adequate adhesion without the use of primers.

27.4 *Design Factor*— Generally, the less engineering knowledge available and the higher the degree of risk, the larger the design factor. The establishment of a design factor for a SSG system structural sealant depends in part on the performance criteria established for a SSG system, and consideration of other factors, such as risk to building occupants and pedestrians, loss of strength or adhesion that may occur with system aging and weathering, a secondary stresses evaluation, degree of technical innovation and engineering unknowns when all conditions of application and use cannot be controlled or even foreseen, and the ultimate tensile strength of the sealant. With a minimum ultimate structural sealant strength of 345 kPa (50 psi), as required by Specification C 1184, and a SSG industry recommended maximum design strength of 139 kPa (20 psi) a minimum design factor of 2.5 currently is used. Depending on the ultimate strength of a particular structural sealant and the determined structural sealant design factor, a design strength of less than 139 kPa (20 psi) could result. If a different structural sealant is planned for maintenance work, then its strength and other properties should be evaluated and found to be compatible with the chosen design factor, as well as other system performance criteria established for the primary structural sealant. For example, a multicomponent structural sealant that has an ultimate strength of 589 kPa (100 psi), may be used during fabrication in a factory glazing environment while a single-component structural sealant that has an ultimate strength of 345 kPa (50 psi), may be used for post construction building maintenance. Using a 139 kPa (20 psi) design tensile strength results in design factors respectively of 5:1 and 2.5:1 for the structural sealants; therefore, both should be verified as meeting the system performance criteria and other factors.

27.5 *Design Strength*— The SSG industry, by consensus, has limited the design tensile strength of a structural sealant to a maximum of 139 kPa (20 psi). Using a design tensile strength value in excess of 139 kPa (20 psi) should not be used without serious consideration. The 139 kPa (20 psi) limit has proven by experience to be a wise choice.

28. Structural Sealant Joint Terminology

28.1 *General*—Since the beginning of the SSG industry,

nomenclature for structural joint terminology has been varied, sometimes confusing, and occasionally creative. The words bite and thickness offer the most concise and easily remembered terms for the two most often used structural joint descriptors. These two terms are defined in 3.2 and illustrated by Figs. 1 and 2.

28.2 *Bite*—This term is similar to its use for a conventionally glazed system, where it refers to the overlap of a glass lite or panel edge by a conventional glazing system, thereby permitting the transfer of an applied load from a glass lite or panel to the framing system. Bite refers to the effective structural contact dimension of the structural sealant, that through its adhesion to the substrates, transfers an applied load from a glass lite or panel to the metal framing system (see Figs. 1 and 2).

28.3 *Thickness*—This term refers to the minimum structural sealant dimension or thickness (see Figs. 1 and 2) that is acceptable between structurally bonded surfaces or substrates. To permit the proper application of a structural sealant into and filling a joint opening, a minimum dimension needs to be maintained. For shop or factory glazing, an opening as small as 5 mm (3/16 in.) has been glazed successfully. For construction-site glazing, an opening no less than 6 mm (1/4 in.) is required for proper sealant application. Thickness also is dependent on the joint opening bite. The greater the bite, the greater the required thickness to allow proper and complete sealant filling of the joint opening. The thickness of a structural sealant joint also is dependent on an analysis of the interaction of the structural sealant modulus with the primary stress, usually from an applied lateral load, and with other secondary loads, such as those resulting from differential thermal movement between a metal framing system and a structurally glazed glass lite or panel (see 30.3). Depending on system configuration and the size of glass lites or panels, the secondary loads can have a substantial influence on the structural sealant joint thickness dimension and the modulus required of the structural sealant.

29. Structural Sealant Joint Load Transfer

29.1 *General*—Applied loads are transferred from a glass lite or panel through the structural sealant to the supporting metal framing system by stressing the structural sealant in compression, shear, or tension or a combination of shear with either of the other two. The following briefly describes typical primary and secondary loads and the transfer of applied loads for three common structural sealant joint configurations.

29.1.1 *Primary Loads*— This usually is an applied load that is induced by the wind resulting in either a negative or positive pressure being exerted on a SSG system surface. Additionally, for tall or other buildings, the negative or positive pressure loads caused by a stack effect usually are combined with those from wind to arrive at composite primary loads.

29.1.2 *Secondary Loads*— Sources for these applied loads include dead load from a glass lite or panel, differential thermal movement between a glass lite or panel and the supporting metal framing system, differential building movement, SSG system component fabrication, and seismic events.

29.2 *Edge of Lite or Panel*:

29.2.1 *Primary Load*— The structural sealant is adhered to the edge of a glass lite or panel with the opposing face of the structural sealant adhered to a metal framing system surface (Fig. 1a). As a glass lite or panel receives an applied negative pressure from the wind, it is transferred to and through the structural sealant to the metal framing system. The load transfer causes a shear stress in the structural sealant. If an applied load is positive, then the load usually is transferred through a continuous interior gasket upon which the lite or panel rests, and thence, to the metal framing system. This method of load transfer often is used in sloped glazing and skylight systems, particularly where a glass lite or panel transfers load to a purlin of a metal framing system. This method commonly is used for these systems since the lack of a projecting metal framing system cover at a purlin allows rain to drain off the system, without collecting at a purlin projection that normally would occur with a conventionally glazed sloped or skylight system.

29.2.2 *Secondary Load*— The predominate secondary load, in most circumstances, is due to differential thermal movement between a lite or panel and the metal framing system. As a lite or panel changes dimension relative to the framing system, the structural sealant joint, except where the lite or panel is supported by setting blocks, will experience compressive stress as the lite or panel increases in size and tensile stress as it decreases in size from its installed condition. Also, a secondary load due to dead load support of a lite or panel causes a compressive stress in the structural sealant joint at the bottom, shear stress on the sides, and tensile stress at the top of a vertically oriented rectangular lite or panel.

29.3 *Face of Lite or Panel*:

29.3.1 *Primary Load*— At or near the edge of a glass lite or panel the structural sealant is adhered to the face of the lite or panel with the opposing face of the structural sealant adhered to a metal framing system surface (Fig. 1b and d). As a glass lite or panel receives an applied negative or positive pressure from the wind, the load is transferred through the structural sealant to the metal framing system. A negative pressure causes a tensile stress and a positive pressure a compressive stress in the structural sealant and, depending on its relative stiffness as compared to the structural sealant, the spacer. This method is used most commonly for window and curtain wall SSG systems.

29.3.2 *Secondary Load*— The predominate secondary load, in most circumstances, is due to differential thermal movement between a lite or panel and the metal framing system. As a lite or panel changes dimension relative to the framing system, the structural sealant joint, except where the lite or panel is supported by setting blocks, will experience a shear stress as the lite or panel changes in size from its installed condition. Also, a secondary load due to dead load support of a lite or panel causes a shear stress in the structural sealant joint of a vertically oriented rectangular lite or panel.

29.4 *Edge and Face of Lite or Panel*:

29.4.1 *Primary Load*— The joint configuration indicated in Fig. 1c has a structural sealant adhered to both an edge and face of a glass lite or panel. This configuration was used in some of the first SSG systems and is currently used with a monolithic glass lite, particularly at the spandrel area of a curtain wall system. With this joint configuration, and a negative applied

wind load, the sealant is stressed in both shear and tension, and, for a positive applied load, the structural sealant is stressed in compression. The negative applied load causes shear stress for that structural sealant portion at the edge of a lite or panel and tension stress for that portion adhered to its face. This joint configuration raises the question of how much of the negative applied load is resisted in tension and how much is resisted in shear by the structural sealant. At least one structural sealant manufacturer has conducted testing that indicates, for a negative applied load on a glass lite or panel, most of the load will be resisted in tension with very little in shear (**34**). Typically, the amount of the applied load on a structural sealant that will be taken in shear, for this joint configuration, is 3 to 5 %. Even with the most advantageous structural sealant joint geometry, it may rise to only about 11 % of an applied load. For this joint configuration, common usage is to ignore the shear contribution and to calculate the required joint size based only on that portion of the joint that is effectively in tension or compression.

29.4.2 *Secondary Load*— The predominate secondary load, in most circumstances, is due to differential thermal movement between a lite or panel and the metal framing system. As a lite or panel changes dimension relative to the framing system, the structural sealant joint, except where the lite or panel is supported by setting blocks, will experience compressive stress as the lite or panel increases in size and tensile stress as it decreases in size from its installed condition, for that structural sealant portion at the edge of a lite or panel, and shear stress for that portion adhered to its face. Also, a secondary load due to dead load support of a lite or panel, for that structural sealant portion at the edge of a lite or panel, causes a compressive stress in the structural sealant joint at the bottom, shear stress on the sides, and tensile stress at the top of a vertically oriented rectangular lite or panel and shear stress for that portion adhered to its face.

29.5 *Vertical Corner*— The structural sealant is adhered to the edge of one glass lite or panel and to the face of another (see Fig. 2a). This configuration typically is used for a vertical joint at the corner of a SSG system where it not only transfers some portion of an applied load but also functions as a weatherseal. Often, it is used in lieu of a corner metal framing system mullion. Load transfer occurs between the glass lites or panels (see Fig. 2b and c). With a positive applied lateral load to both lites or panels, the structural sealant joint is in compression while simultaneously experiencing shear. With a negative applied lateral load to both lites or panels, the structural sealant joint is in tension while simultaneously experiencing shear. The sealant joint also can experience stress from a negative applied load on one lite or panel and simultaneously a positive applied load to the other. The bite and thickness dimensions for the sealant joint must be sufficient to accommodate the stresses from these applied load conditions. In general, the vertical structural sealant joint is not relied upon to provide lateral load edge support for the glass lite or panel. Typically, the glass lite or panel is analyzed and sized as if supported only by its other sides.

30. Structural Sealant Joint Design

30.1 *Analysis Methods*:

30.1.1 *General*—There are several commonly accepted methods of analysis to determine the effect of an applied load when establishing the dimensions of a structural sealant joint. The method chosen for evaluation, for example, trapezoidal, rigid plate, finite element, and combined loads, will be dependent on a SSG system's particular design and loading conditions. The following briefly describes analysis methods, including several calculation examples, and primary and secondary loads that commonly are encountered in SSG system design.

30.1.2 *Trapezoidal*— This is a method of primary load transfer that generally has been accepted by the glazing industry for many years and has emerged as an industry standard. The method is an approximation of the complex plate bending behavior of a thin, flexible lite or panel when experiencing lateral wind load. It is based on the assumption that a rectangular flexible glass lite or panel, when experiencing a lateral load, will deflect in tributary areas as indicated by Fig. 8a. This method has been used satisfactorily to determine a structural sealant joint bite dimension for a rectangular lite or panel since the beginning of SSG. When used with a 138 kPa (20 psi) sealant design strength and a rectangular lite or panel, the method adequately determines a structural sealant joint bite dimension. This effect has been documented in full size mock-up testing of glass lites where the inward or outward deflection of the glass, as judged by the reflective patterns in the glass, can be seen to approximate a trapezoidal configuration. As can be determined from an examination of Fig. 8a, the applied load transferred to a structural sealant joint will vary due to the shape of the tributary area; however, the assumption is made that the largest value for the applied load, occurring at the center point of the glass lite or panel short dimension, will be used to determine the dimensions required for the structural sealant joint.

30.1.3 *Rigid Plate*— This method assumes that a glass lite or panel essentially is rigid and does not deflect with an applied primary lateral load; therefore, the entire glass lite or panel becomes the tributary area (Fig. 8b). The applied load is assumed to be transferred uniformly to the lite or panel perimeter, and thence, to the structural sealant. The dimensions of the structural sealant joint are determined simply using the total load on the lite or panel, its perimeter length, and the allowable structural sealant design stress as illustrated in the following examples.

30.1.4 *Finite Element*— A more accurate analysis of primary and secondary load effects on structural sealant joint stresses can be determined by use of computer based numerical analysis techniques. A finite difference method has been used to analyze the geometrically nonlinear behavior of an applied load on an IG unit (**35**). A prediction of the stresses in the structural sealant joint can be determined from such an analysis. The finite element method also has been used to analyze the geometrically nonlinear behavior of an applied load on a monolithic glass lite, with very similar results for the structural sealant joint stress (**36**). These analysis methods indicate that the maximum primary lateral load induced tensile stress in a structural sealant joint occurs near a quarter point of the long edge of a glass lite or IG unit. Generally, the magnitude of the maximum stress is similar to that predicted by a trapezoidal method, although in a different location along the

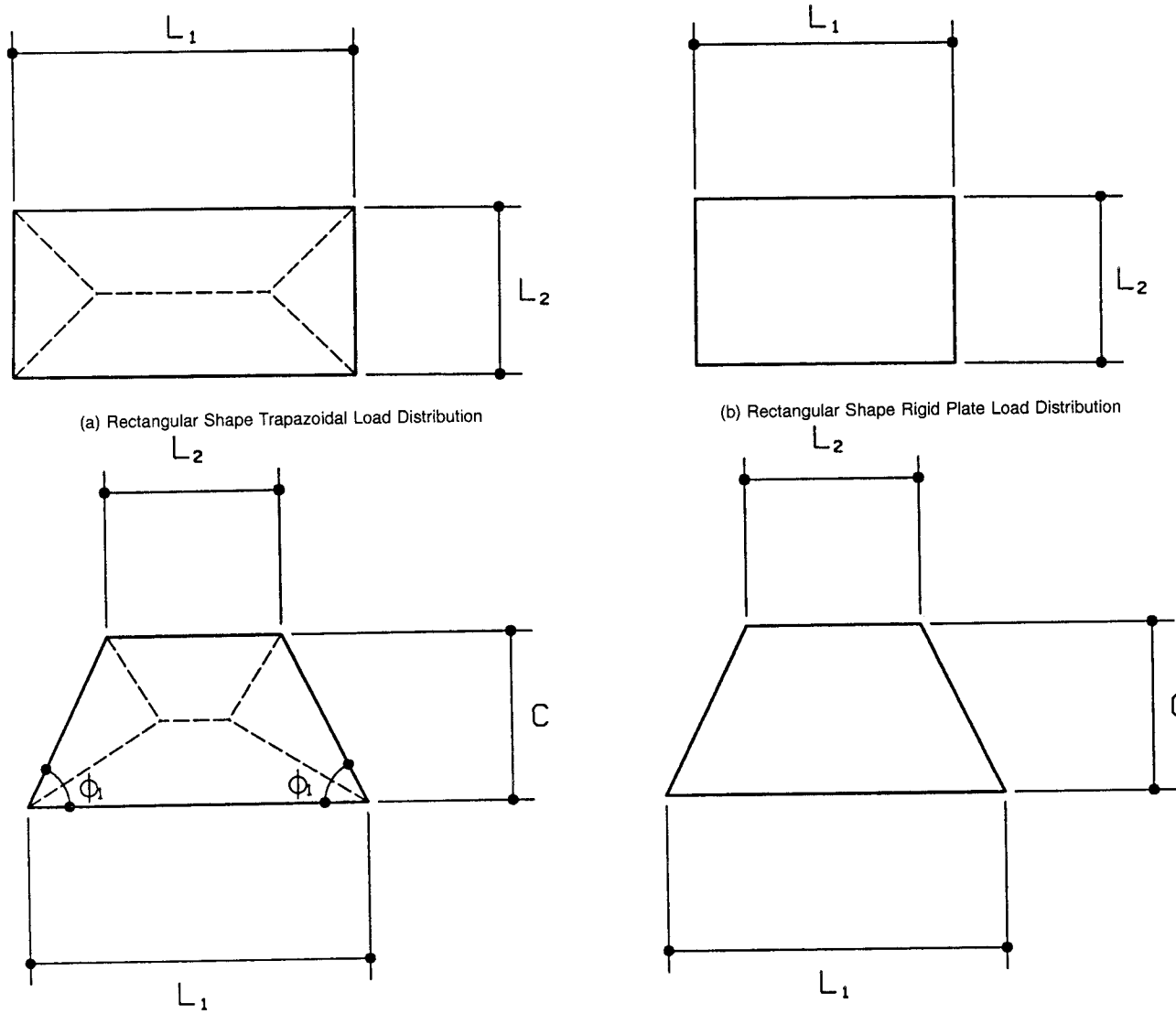

(a) Rectangular Shape Trapazoidal Load Distribution

(b) Rectangular Shape Rigid Plate Load Distribution

(c) Regular Shape Quadrilateral Trapazoidal Load Distribution

(d) Regular Shape Quadrilateral Rigid Plate Load Distribution

FIG. 8 Load Distribution Patterns for Quadrilateral Shapes

edge of the lite. The finite element method is readily adaptable to a nonrectangular glass lite or panel shape. With modification, this also should be possible using a finite difference method. As better load-deformation models are developed, it should be possible to accurately analyze a structural sealant joint design when experiencing loading conditions up to failure of the joint. The effect of a secondary loading condition(s) also can be analyzed in combination with a primary loading condition.

30.1.5 *Combined Loads*— The combined effect of a primary lateral load, usually wind induced, along with secondary loads, due to among others, differential thermal movement and glass lite or panel dead loads, should be evaluated for their combined effect on a structural sealant joint. It is important, when considering the effect of secondary loads, to understand that they can occur independent of the primary load, but most often, to various degrees, can occur simultaneously with it. If the effect of combined loads is not considered, as a minimum, the primary and secondary loads should be considered independently with neither a primary load nor a secondary load induced stress exceeding the applicable allowable structural sealant tensile or shear strength.

30.1.5.1 *Face of Lite or Panel*—When a structural sealant joint is behind the face of a lite or panel, the combined stresses will be tension from a negative wind load (compression from a positive wind load) and shear from, for example, differential thermal movement. Glass lites, or panels, or both, that are structural sealant glazed to an aluminum framing system will experience differential thermal movement relative to the framing system due to varying environmental temperature and moisture conditions. This movement creates a shear stress in a structural sealant joint that typically is at its greatest value at the corners of a lite or panel. If the bite of the structural sealant joint is established using the primary load and the maximum allowable tension stress, typically 139 kPa or (20 psi), then the thickness dimension of the structural sealant joint should be established to minimize the shear stress from differential thermal movement or other secondary loads. In general, the

larger the lite or panel, the greater the thickness dimension required between lite or panel and framing system to keep the structural sealant shear stress within acceptable limits. Outward movement of a lite or panel, due to a negative primary load, also must be considered when determining the thickness dimension to preclude movement off setting blocks. Some SSG system designers, working with the sealant manufacturer technical representative, will limit the secondary load stress to no more than an additional 21 to 35 kPa (3 to 5 psi). Another approach taken by some SSG system designers is that the sum of the tension and shear stresses should not exceed the customary 139 kPa (20 psi), and therefore, a larger bite dimension is the result with less allowable tension stress permitted. The SSG system designer, therefore, will use 139 kPa (20 psi) less the secondary load stress as the allowable design stress for primary load affects. This allowable design stress then is used with the standard structural equations to determine the structural sealant joint bite dimension. Alternately, for a combined loading condition, the shear stress can be considered with the tensile stress (**37**). The ultimate strength interaction for combined tension and shear can be described by an elliptical equation (**38**). The effect of combined loads then can be considered using Eq 1.

$$\frac{f_v^2}{F_v^2} + \frac{f_t^2}{F_t^2} = 1 \tag{1}$$

30.1.5.2 *Edge of Lite or Panel*—When a structural sealant joint is at the edge of a lite or panel, combined stresses usually are shear from a negative wind load and tension or compression from a secondary load, such as differential thermal movement. Thermal movement results in compression or tension stresses for the structural sealant joint. Additionally, the structural sealant modulus characteristics due to compression and tension stresses are not the same. Typically, for this configuration, the compression stress will be greater than the tension stress, particularly for a large lite or panel. For a glass lite, this joint configuration is restrictive since the bite dimension is controlled and limited to the thickness of the lite; therefore, the structural sealant joint thickness dimension should be sufficiently large, consistent with the allowable outward movement for the lite due to a negative primary load, to minimize the stress introduced by differential thermal movement. Increasing the structural sealant joint thickness dimension and using a structural sealant with a medium rather than high modulus of elasticity, separately or together, will tend to lessen the effect of a secondary stress. This usually is the case when the secondary load stress is large due to a special design requiring a small joint size or other considerations tending to limit the joint thickness. For this joint configuration and combined loading condition, the following analysis can be performed. First, determine the thermal movement value for both expansion and contraction of the lite or panel. For a particular structural sealant and joint configuration, perform laboratory testing to determine the structural sealant stress-to-strain characteristics for both compression and extension. Using the values determined for differential thermal movement in tension and compression and the laboratory determined stress-to-strain data for structural sealant extension and compression, determine which set of conditions will result in the largest stress value and subtract this value from 139 kPa (20 psi) to obtain a new primary load allowable design stress. This value then is used with the standard structural equations to determine the structural sealant joint bite dimension for a primary load.

30.2 *Primary Load*:

30.2.1 *General*—Determining the effect of an applied load on a structural sealant joint for a SSG system, in the beginning of this technology, usually involved considering only the effect of a lateral load caused by wind forces. Currently, this is still the primary load that establishes the bite dimension of a structural sealant joint; however, secondary loads caused by conditions, such as dead load, differential thermal movement, seismic events, fatigue, and fabrication, may have to be considered for their effect on the bite, thickness, and configuration of a structural sealant joint. An applied lateral load on a lite or panel can be treated as one that causes the lite or panel to deflect with load or one that does not deflect and is essentially rigid. For a rectangular, as well as a nonrectangular, lite or panel, calculation methods are described for both flexible and rigid loading conditions. The following sections briefly describe typical methods that are used to establish the effect of an applied lateral load on a structural sealant joint, and thereby, determine its bite dimension.

30.2.2 *Rectangular Shape Load Distribution*—Currently, there are two methods used for determining structural sealant joint bite dimension requirements for a rectangular lite or panel. The trapezoidal method is for a lite or panel that deflects with lateral load and the rigid plate method for one that essentially does not deflect. Neither the trapezoidal nor rigid plate method determine the requirements for any secondary loads that also may occur for a particular SSG application.

30.2.3 *Trapezoidal Shape Load Distribution*:

30.2.3.1 *General*—Full-scale mock-up testing by various sealant manufacturers and curtain wall contractors has confirmed the method's validity. This method is used primarily with a lite or panel that is adhered structurally along its perimeter and has bending deflection when loaded. For the trapezoidal method, the primary load (usually from wind) is distributed to the perimeter on the basis of tributary areas as indicated in Fig. 8a. The load is assumed to be distributed evenly along the adhered lite or panel edge of the tributary area, and therefore, determines a structural sealant joint bite based on an even distribution of structural sealant stress at any point along the perimeter of a lite or panel.

30.2.3.2 *Calculation Method*—A trapezoidal load distribution method uses the bisector of the lite or panel 90° corners to create the load distribution pattern. A simple trigonometric analysis indicates that multiplying the applied lateral load by one-half the lite or panel short side dimension, and then dividing that sum by the allowable sealant stress will determine the bite dimension to satisfy the loading condition.

30.2.3.3 *Calculation Example*—A vision lite of a curtain wall system will have its applied lateral load supported by a structural sealant joint along its four sides. The long side (L_1) of the lite is 2438 mm (8 ft) and the short side (L_2) is 1219 mm (4 ft) and it is 6 mm (¼ in.) thick. The applied lateral load (P_w) due to wind is 1.92 kPa (40 psf). The allowable tension stress

(F_t) for the structural sealant, for this example, will be 138 kPa (20 psi). For this and other examples that follow, conversion factors, for example, to convert feet to inches, are used in the inch-pound unit calculations that accompany the SI unit calculation examples. Determine the structural sealant joint bite dimension (B) for a lite or panel with a trapezoidal load distribution by using Eq 2.

$$B = \frac{\frac{L_2}{2} P_w}{F_t} \tag{2}$$

substituting:

$$B = \frac{\frac{1219}{2}(1.92)}{138} = 8.48 \text{ mm}$$

AND

$$B = \frac{\frac{4}{2}(40)}{20(12)} = 0.33 \text{ in.}$$

30.2.4 *Rigid Plate Load Distribution*:

30.2.4.1 *General*—This method is used for panels that are very stiff and have little, if any, bending deflection. Examples of such a panel are a small size and relatively thick monolithic glass lite, a metal panel with a honeycomb core construction, and, in some cases, a stone or ceramic tile. A lite or panel applied load is assumed to be distributed uniformly to the structural sealant joint along its perimeter.

30.2.4.2 *Calculation Method*—For a rigid plate load distribution method (see Fig. 8b), the bite dimension required to satisfy the loading condition is determined by means of a simple geometric analysis. First, multiply the applied lateral load by the area, which is the product of the short and long side dimensions, of a rectangular lite or panel. Then divide that result by the product that results by multiplying the allowable sealant stress by the lite or panel perimeter. The bite dimension determined by the rigid plate load distribution method, for the following example, can be compared to the bite dimension that would be determined using the trapezoidal load distribution method. Doing so indicates that the trapezoidal method would require a bite dimension of 8.49 mm (0.33 in.). The rigid plate method indicates a significantly smaller structural sealant bite dimension is required when compared to the trapezoidal method. While less conservative than the trapezoidal method, the rigid plate method accurately predicts a structural sealant bite dimension for a rigid plate loading condition.

30.2.4.3 *Calculation Example*—A metal faced honeycomb core panel for a curtain wall system will have its applied lateral load supported by a structural sealant joint along its four sides. The long side (L_1) of the panel is 1524 mm (5 ft), the short side (L_2) is 1219 mm (4 ft), and it is 51 mm (2 in.) thick. The applied lateral load (P_w) due to wind is 1.92 kPa (40 psf). The allowable tension stress (F_t) for the structural sealant, for this example, will be 138 kPa (20 psi). Determine the structural sealant joint bite dimension (B) for a lite or panel with a rigid plate load distribution by using Eq 3.

$$B = \frac{L_1(L_2)(P_w)}{2F_t(L_1 + L_2)} \tag{3}$$

substituting:

$$B = \frac{1219(1524)(1.92)}{2(138)(1219 + 1524)} = 4.71 \text{ mm}$$

AND

$$B = \frac{4\,(5)(40)}{2(20)(4 + 5)(12)} = 0.19 \text{ in.}$$

30.2.5 *Nonrectangular Shape Load Distribution*:

30.2.5.1 *General*—A nonrectangular shape lite or panel commonly is used for curtain wall, sloped glazing, and entry SSG systems. A regular quadrilateral (Fig. 8c and d), circular (Fig. 9d), or triangular (Fig. 9a, b, or c), shape lite or panel commonly is encountered. Methods to determine the bite of a structural sealant joint for these three shapes are presented. These methods, as well as other pertinent information, are described in more detail in Ref (**39**). Other shapes, such as, a parallelogram, trapezoid, and trapezium also can be encountered in SSG systems. The structural sealant bite for these shapes also can be determined using the elementary principles of geometry and algebra as illustrated by the examples in this guide and Ref (**39**).

30.2.6 *Circular Load Distribution*:

30.2.6.1 *General*—The symmetry of a circular lite or panel (see Fig. 9d) causes the applied load experienced by a structural sealant joint as its perimeter to be constant. The structural sealant joint bite dimension can be determined using Eq 4. Due to symmetry, Eq 4 would apply to a rigid, as well as, nonrigid lite or panel.

30.2.6.2 *Calculation Method*—A simple geometric analysis indicates that multiplying the applied lateral load by the area of the lite or panel, and then dividing that result by the product determined by multiplying the allowable sealant stress by the lite or panel perimeter will determine the bite dimension to satisfy the loading condition.

30.2.6.3 *Calculation Example*—An entry for a curtain wall system will have circular lites as a design feature. The radius (R) of a lite is 610 mm (2 ft). The applied lateral load (P_w) due to wind is 1.92 kPa (40 psf) and the allowable tension stress (F_t) for the structural sealant, for this example, will be 138 kPa (20 psi). Determine the structural sealant joint bite dimension (B) for a circular lite or panel using Eq 4.

$$B = \frac{0.5\,P_w(R)}{F_t} \tag{4}$$

substituting:

$$B = \frac{0.5(1.92)(610)}{138} = 4.24 \text{ mm}$$

AND

$$B = \frac{0.5(40)(2)}{20(12)} = 0.17 \text{ in.}$$

30.2.7 *Triangular Load Distribution*:

30.2.7.1 *General*—Any triangular-shaped lite or panel (see Fig. 9a, b or c) can occur in SSG systems on buildings that are of an irregular configuration. Both a flexible and rigid lite or panel can be encountered. The following calculation example is for a flexible lite or panel. A rigid condition also can be evaluated with the appropriate equation.

30.2.7.2 *Calculation Method*—The following method is for

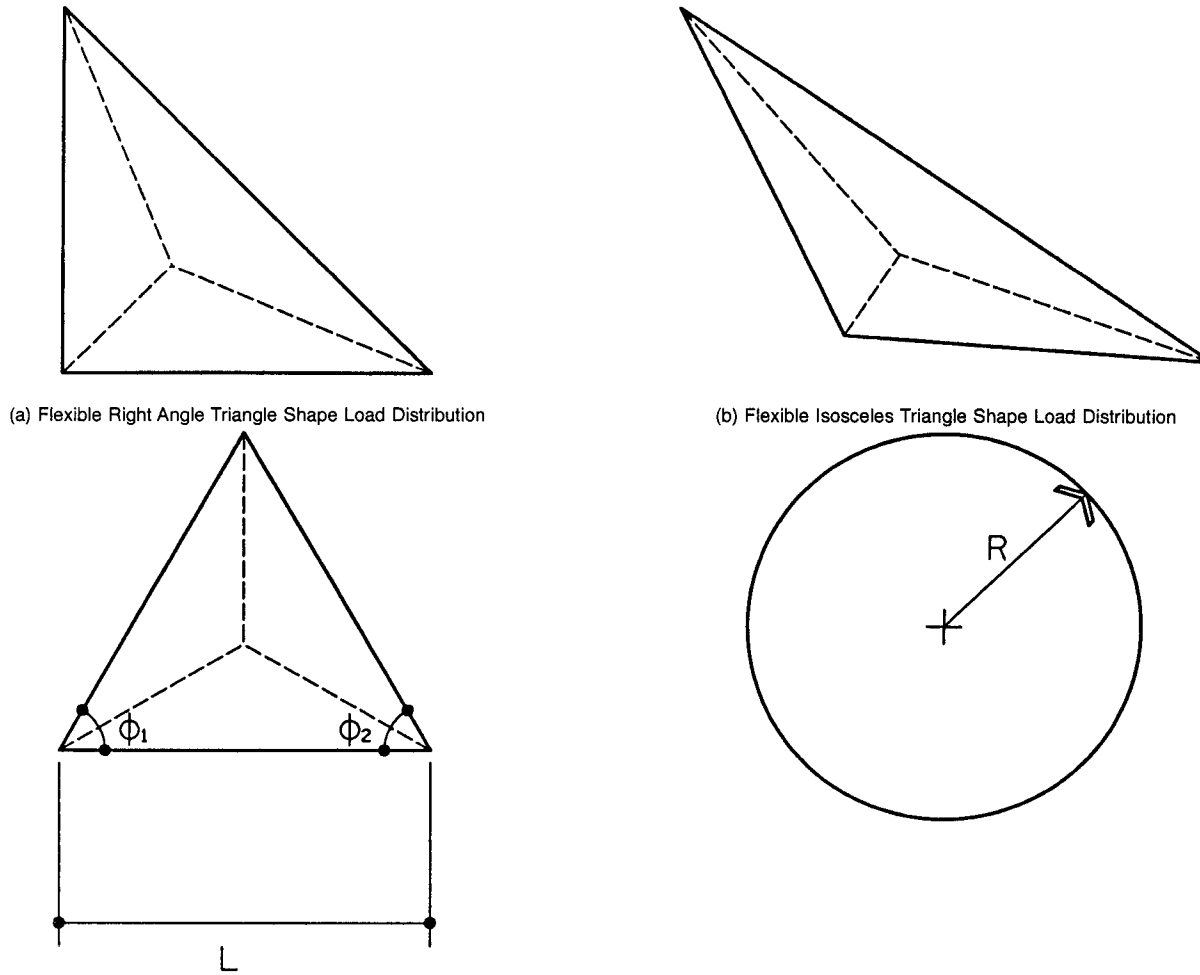

(a) Flexible Right Angle Triangle Shape Load Distribution

(b) Flexible Isosceles Triangle Shape Load Distribution

(c) Flexible Equilateral Triangle Shape Load Distribution

(d) Circular Shape Load Distribution

FIG. 9 Load Distribution Patterns for Nonrectangular Shapes

a lite or panel that is flexible under an applied lateral load. By examination of Fig. 8c, it is apparent that several trigonometric equations are necessary to determine Eq 5. The derivation of Eq 5 is described in detail in Ref **(39)**. For a rigid triangular lite or panel, an applied lateral load is multiplied by the area of the lite or panel, and then that result is divided by the product determined by multiplying the allowable sealant stress by the lite or panel perimeter to determine the bite dimension to satisfy the loading condition.

30.2.7.3 *Calculation Example*—A curtain wall system has a design feature that includes a rose shape window composed of equilateral triangle-shaped segments that are glazed structurally to the framing system. The side of a triangle (L) is 1.52 m (5 ft) and for an equilateral triangle both included angles (ϕ_1, ϕ_2) are 60°. The applied lateral load (P_w) due to wind is 1.92 kPa (40 psf) and the allowable tension stress (F_t) for the structural sealant, for this example, will be 138 kPa (20 psi). Determine the structural sealant joint bite dimension (B) for any triangular lite or panel using Eq 5.

$$B = \frac{\dfrac{L(P_w)}{F_t}}{\left(\dfrac{1}{\tan\frac{1}{2}\phi_1}\right) + \left(\dfrac{1}{\tan\frac{1}{2}\phi_2}\right)} \tag{5}$$

substituting:

$$B = \frac{\dfrac{1.52(1.92)}{138}}{\left(\dfrac{1}{\tan\frac{1}{2}(60)}\right) + \left(\dfrac{1}{\tan\frac{1}{2}(60)}\right)} = 6.11 \text{ mm}$$

AND

$$B = \frac{\dfrac{5(40)}{20(12)}}{\left(\dfrac{1}{\tan\frac{1}{2}(60)}\right) + \left(\dfrac{1}{\tan\frac{1}{2}(60)}\right)} = 0.24 \text{ in.}$$

30.2.8 *Regular Shape Quadrilateral Load Distribution*:

30.2.8.1 *General*—A regular quadrilateral lite or panel has

two parallel sides that are closer together then the two nonparallel sides, and both sets of included angles are equal. If the lite or panel is thin and flexible (Fig. 8c), then Eq 2 for a rectangular lite or panel can be used to determine the structural sealant joint bite dimension, where the short span C (the distance between the parallel sides in Fig. 8c) is substituted for the short side (L_2 in Eq 1) dimension, resulting in Eq 6. If the lite or panel is rigid, very stiff with little if any bending deflection (Fig. 8d), then the following method can be used to determine the structural sealant joint bite dimension.

$$B = \frac{\frac{C}{2}(P_w)}{F_t} \tag{6}$$

30.2.8.2 *Calculation Method*—For a rigid lite or panel, very stiff with little if any bending deflection, the area of the lite or panel is multiplied by the applied lateral load (P_w) and that result is then divided by the product of the lite or panel perimeter multiplied by the allowable tensile stress (F_t) of the structural sealant.

30.2.8.3 *Calculation Example*—A pyramidal shape lobby will have regular quadrilateral shape panels as part of the curtain wall system. The long side (L_1) of a panel is 1.83 m (6 ft), the short side (L_2) is 1.22 m (4 ft), the perpendicular distance between parallel sides C is 1.07 m (3.5 ft). The applied lateral load (P_w) due to wind is 1.92 kPa (40 psf). The allowable tension stress (F_t) for the structural sealant, for this example, will be 138 kPa (20 psi). Determine the structural sealant joint bite dimension (B) for a regular quadrilateral shape lite or panel with a rigid plate load distribution by using Eq 7.

$$B = \frac{\frac{C}{2}(L_1 + L_2)(P_w)}{F_t\left(L_1 + L_2 + 2\sqrt{\left(\frac{L_1 - L_2}{2}\right)^2 + C^2}\right)} \tag{7}$$

substituting:

$$B = \frac{\frac{1.07}{2}(1.83 + 1.22)(1.92)(1.000)}{138\left(1.83 + 1.22 + 2\sqrt{\left(\frac{1.83 - 1.22}{2}\right)^2 + (1.07)^2}\right)} = 4.3 \text{ mm}$$

AND

$$B = \frac{\frac{3.5}{2}(6 + 4)(40)}{20(12)\left(6 + 4 + 2\sqrt{\left(\frac{6 - 4}{2}\right)^2 + (3.5)^2}\right)} = 0.17 \text{ in.}$$

30.2.9 *Irregular Shape Quadrilateral Load Distribution*—These shapes have either no parallel sides or have two parallel sides that are far apart relative to the distance between the two nonparallel sides (see Fig. 10). Refer to Ref **(39)** for information on determining load transfer to the structural sealant joint.

30.2.10 *Lite or Panel Lateral Movement*—Movement of a lite or panel at its design negative lateral load, caused by an extension of the structural sealant, could result in the lite or panel moving off its setting blocks, and for an IG unit, failure of its edge seal. The expected lateral movement of a lite or panel caused by the extension of the structural sealant when it experiences the lateral load should not exceed one-half of the thickness of the glass lite or panel (one-half of the thickness of the outboard lite or an IG unit). Typically, setting blocks are recessed no more than one-half the thickness of a 6-mm (¼-in.) thick glass lite. This dimension also can apply to a panel. Doing so provides about a 3-mm (⅛-in.) weatherseal sealant coverage over the setting block face. For any lateral loading condition that causes negative (outward) movement of a lite or panel, the structural sealant joint not only has to be designed to resist that load but also not to exceed at least the described setting block criteria so the lite or panel will not move off the setting blocks at that load. Consulting a tension modulus graph, the stress-strain relationship in tension, for the structural sealant will permit determination of the lateral movement of a lite or panel. By referring to the graph at the expected tensile design stress, which is usually 138 kPa (20 psi), the expected sealant movement, and therefore, the lite or panel movement at that stress can be determined. Both lateral load and lateral movement criteria must be satisfied adequately by the structural sealant joint design.

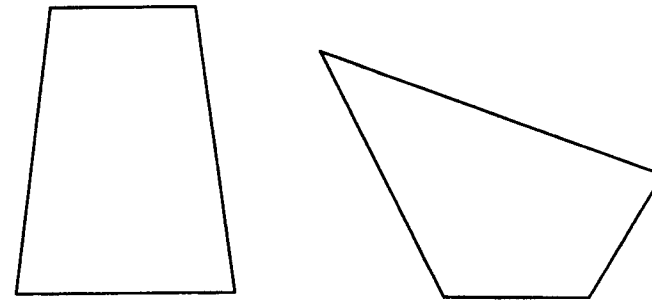

FIG. 10 Examples of Irregular Shaped Quadrilaterals

30.3 *Secondary Loads*:

30.3.1 *General*—The dead load of a lite or panel, its differential thermal movement relative to a framing system, seismic movement, fatigue, fabrication induced loads, and differential building movement, among others, usually are considered as secondary loads that also should be considered for their effects on the dimensions and character of a structural sealant joint and for any impact to its framing system. Secondary loads can become significant and should be considered in conjunction with the primary lateral load and the modulus characteristics of the structural sealant. A primary load has a direct effect on determining the bite dimension while secondary loads frequently will have an effect on determining both the bite and thickness dimension of a structural sealant joint. The following describes and presents calculation examples for commonly encountered secondary loading conditions.

30.3.2 *Dead Load*—For a properly designed SSG system, a glass lite or panel can be structural sealant glazed without the use of setting blocks for dead load support of the glass or panel. Doing so requires the structural sealant joint to provide adequate long-term dead load support. A dead load is constant and introduces a fatigue factor. Additionally, where lites or panels are stacked one above the other, dead load transfer to lites or panels below must be prevented from occurring otherwise unacceptable structural sealant joint loading conditions may result for a particular lite or panel. Generally, monolithic glass, and occasionally, with special analysis, an IG

unit can be used in this manner. At least one sealant manufacturer has conducted testing to determine the long-term effects of a constant dead load and the fatigue factor on a structural sealant joint. The results of the testing indicate that a 7 kPa (1 psi) dead load stress limit for the structural sealant joint is conservative **(40)**. This limit generally has been established as the upper limit with some manufacturers limiting the stress to 3.5 kPa (½ psi). Dead load support of a glass lite or panel by a structural sealant joint must be acknowledged as proper and acceptable by the structural sealant manufacturer.

30.3.2.1 *Insulating Glass*— The most common practice is to have the dead load of both lites of an IG unit supported by setting blocks; however, IG units have been designed to have their dead load entirely supported by the structural sealant joint. Usually, due to the weight of an IG unit, relatively small size units are applicable. The larger the IG unit the larger the required structural sealant joint to not exceed a 7 kPa (1 psi) dead load stress limit. For this application, the IG unit secondary seal also must be designed to support the dead load of the outer lite of the IG unit while also maintaining its structural and hermetic seal properties. If dead load support is being considered, however, the IG unit manufacturer must be included in the structural and detail analysis and must agree to use of IG units in this manner. In general, for a specific SSG application, dead load support of an IG unit by the structural sealant joint should be carefully considered.

30.3.2.2 *Calculation Method*—To determine the minimum bite required of the sealant joint while not exceeding a 7 kPa (1 psi) stress limit for the structural sealant, the dead load of the glass lite or panel is determined and then divided by the perimeter length of the lite or panel to determine a dead load value per lineal unit of perimeter. This value then is divided by the allowable sealant stress for dead load to determine the required minimum bite. This calculation method for dead load support assumes that the dead load of the glass acts normal to the metal framing system members. Also, it does not consider the interaction of the primary and other secondary loads normally associated with a SSG system structural sealant joint and the effect of structural sealant joint thickness. For dead load support, the thinner the thickness of the structural sealant joint, the less potential creep of the structural sealant under dead load depending on the modulus characteristics of the sealant. Other effects on the structural sealant joint, such as differential thermal movement, however, may require a greater thickness than that required for dead load support.

30.3.2.3 *Calculation Example*—A vision lite of a curtain wall system will have its dead load supported by the structural sealant joint without the benefit of setting blocks. The long side (L_1) of the lite is 1524 mm (5 ft), the short side (L_2) is 1219 mm (4 ft) wide, and it is 6 mm (¼in.) thick. The allowable dead load stress (F_d) for the structural sealant, for this example, will be 3.45 kPa (0.5 psi) and the unit weight (W) of the glass is 15.87 kg/m^2 (3.25 lb/ft^2). Determine the structural sealant joint bite dimension (B) required for the dead load support of a glass lite or panel using Eq 8.

$$B = \frac{L_1(L_2)(W)}{2F_d(L_1 + L_2)} \tag{8}$$

substituting:

$$B = \frac{1524(1219)(15.87)}{2(3.45)(1524 + 1219)(100)} = 15.58 \text{ mm}$$

AND

$$B = \frac{5(4)(3.25)}{2(0.5)(5 + 4)(12)} = 0.60 \text{ in.}$$

30.3.3 *Differential Thermal Movement*:

30.3.3.1 *General*—The wind load for which a SSG system will be designed, usually is for a once in a 50- or 100-year occurrence. This wind load, when transferred to a structural sealant joint, is considered a short duration event, typically measured in seconds for a gust. A structural sealant joint also will experience a load from thermal movement, which occurs at least daily, and will reach a peak value several times a year. This load or force caused by thermal movement can last for hours. Also, if a SSG joint is glazed at a low temperature, for example 4°C (40°F), and then during the warm summer months, is in a state of prolonged extension it will experience an extended period of thermal load. A glass lite or panel as the ambient temperature changes and depending on at least its solar absorptivity and the amount of solar radiation it receives, will change dimension a predictable and calculable amount (see Fig. 11a). For a weatherseal joint between the edges of lites or panels, thermal movement of the lite or panel creates a tensile or compressive force in the sealant, depending on whether the joint is extended or compressed. For a weatherseal joint, the thermal movement of the joint is established, and depending on the movement ability of the sealant among others, the width of the weatherseal joint then is determined by calculation **(31)**. If a structural sealant joint is expected to experience differential thermal movement, however, the joint should be evaluated to determine that the stress in the structural sealant produced by the movement will be at an acceptable level. The following will describe briefly the effect of differential thermal movement for two of the most common structural sealant joint configurations.

30.3.3.2 *Edge of Lite or Panel Structural Sealant Joint*— When a structural sealant joint is at the edge of a lite or panel (see Fig. 1a) the amount of sealant stress induced by differential thermal movement that extends the joint is determined from a tension modulus graph (the stress-strain relationship in tension) for a structural sealant. By referring to the graph at the expected movement value the stress at that value can be determined; however, when the sealant stress induced by differential thermal movement is in compression, the less commonly available compression modulus graph, the stress-strain relationship in compression, must be used to determine the stress that will be generated for the joint. The expected differential thermal movement should be evaluated in conjunction with the particular stress-strain curve to determine that the stress in the structural sealant is no greater than 138 kPa (20 psi). It is good practice to limit the shear stress to something less than 138 kPa (20 psi), which is the normally used structural sealant tensile design strength.

30.3.3.3 *Face of Lite or Panel Structural Sealant Joint*— When a structural sealant joint is at the face of a lite or panel (see Fig. 1b/Fig. 2a), the sealant stress induced by differential thermal movement is in a shear mode **(41)**. A structural sealant between the face of a lite or panel and the metal framing

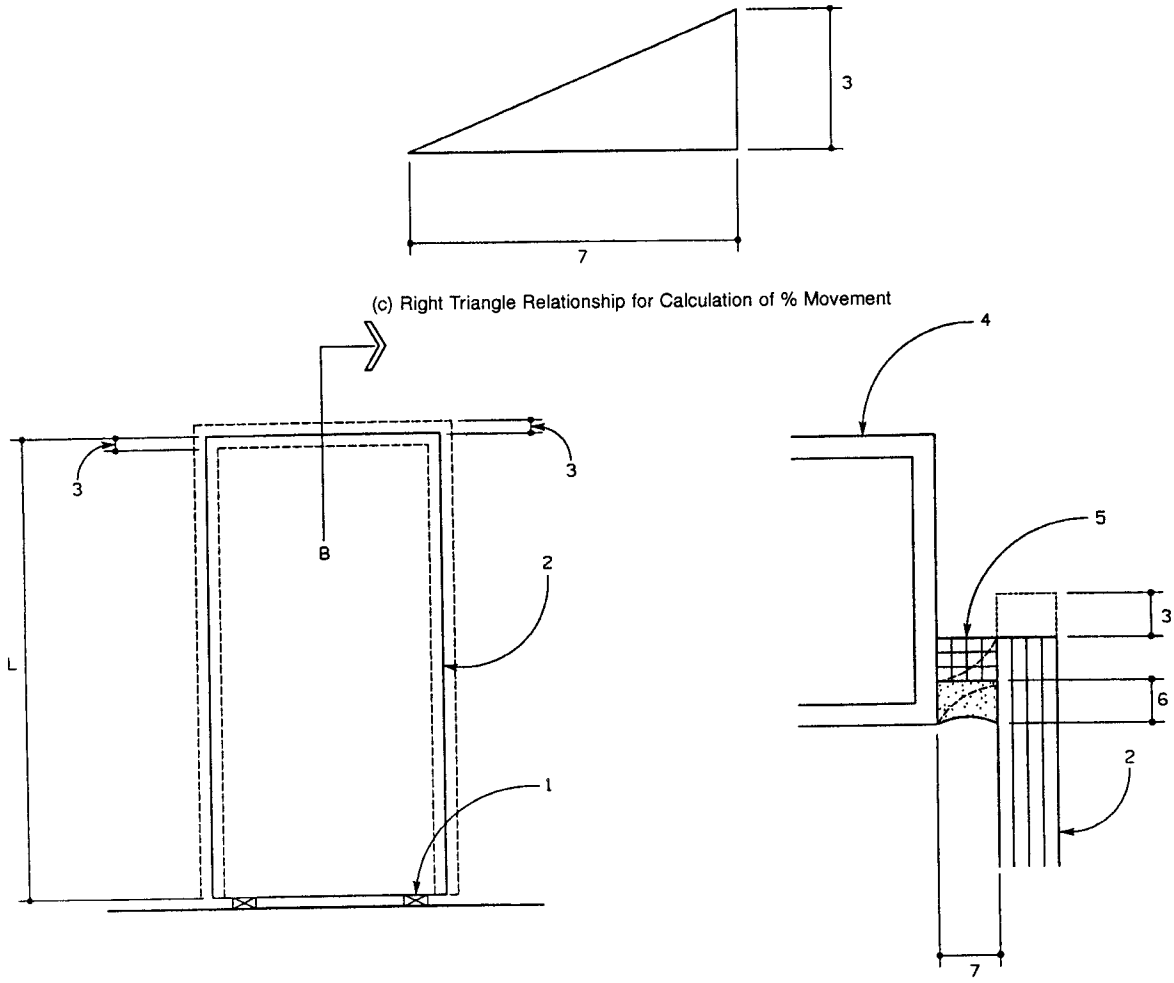

LEGEND

(1) Setting Block
(2) Glass Lite or Panel
(3) Differential Thermal Movement (ΔL)
(4) Metal Framing System
(5) Spacer
(6) Bite (B)
(7) Thickness (T)

FIG. 11 Differential Thermal Movement Between a Lite or Panel and a Metal Framing System

system will experience shear as the lite or panel is heated or cooled, and it moves differentially to a metal framing system (see Fig. 11a). The shear stress for this structural sealant joint is determined from the calculated differential movement in shear. If the distance between a lite or panel and the face of the metal framing system is one leg of a right triangle, and the differential shear movement is the other leg of a right triangle, then the hypotenuse of that triangle is the stretched length of the structural sealant due to differential thermal movement (see Fig. 11b and c). The percent change in the sealant joint thickness, the stretched length less the joint thickness expressed as a percent, then can be used with a shear modulus graph, the stress-strain relationship in shear, to determine the expected shear stress in the structural sealant. If a shear modulus graph is not available, a stress-strain curve from a tension modulus graph may be appropriate to approximate the stress in shear (**41**). The expected differential thermal movement should be evaluated in conjunction with the stress-strain curve for the structural sealant to determine that the stress in the structural sealant is no greater than 138 kPa (20 psi). It is good practice to limit the shear stress to something less than 138 kPa (20 psi), which is the normally used structural sealant tensile design strength. If the shear stress value is large, it can be lowered by increasing the thickness of the structural sealant joint, or by using a lower modulus structural sealant; however, this change should be considered with at least the lateral movement induced by a negative wind load.

30.3.3.4 *Edge and Face of Lite or Panel Structural Sealant Joint*—Due to the joint configuration (see Fig. 1c), part of the structural sealant joint will experience the movements described in 30.3.3.2 and part the movements described in 30.3.3.3. The effect of these movements, individually and in conjunction with an applied lateral load, should be evaluated to determine the required size of the structural sealant joint.

Particular attention should be directed towards precluding a tear and its propagation from occurring due to the movements the joint will experience, particularly at the interior facing corner of a lite or panel.

30.3.3.5 *Vertical Corner Structural Sealant Joint*—This joint configuration (see Fig. 2a) also will experience differential thermal movement between the lites or panels (see Fig. 12). If the joint tends to open due to lite or panel contraction the structural sealant could experience both tension and shear movement, depending on the size of the respective lites or panels. If the joint tends to close due to lite or panel expansion, then the structural sealant could experience both compression and shear movement, depending on the size of the respective lites or panels. The effect of an applied lateral load and thermal movement should be evaluated individually and also as a combined loading condition, in conjunction with the structural sealant modulus, to determine which of the loading conditions will establish the required joint size.

30.3.3.6 *Calculation Method*—The shear movement of a structural sealant joint, that is adhered to the face of a lite or panel (see Fig. 11), is determined as follows. The differential thermal movement of the lite or panel is determined and that value becomes one leg of a right triangle. The thickness of the structural sealant joint is the other leg. Using a Pythagorean equation, the length of the hypotenuse of the triangle is determined, which is the stretched length of the structural sealant. From this value, the joint thickness is subtracted and the resultant then is divided by the joint thickness and multiplied by 100 to determine the percent of shear movement.

30.3.3.7 *Calculation Example*—A reflectively coated 6-mm (¼-in.) thick glass lite of a curtain wall system on a building in Detroit, MI rests on setting blocks. The vertical thermal movement (ΔL) of the lite is expressed at the top of the lite. The lite is 2.44 m (8 ft) long (L), has a coefficient of linear thermal movement (α) of 0.0000088 mm/mm/°C (0.0000049 in./in./°F), and it is adhered to the metal framing system with a structural sealant joint that has a thickness (T) of 6.35 mm (¼ in.). The ambient summer temperature (T_a) is 33°C (92°F), and the ambient winter temperature (T_w) is −16°C (3°F). The solar absorptivity coefficient (A) for the reflective glass is 0.83, and its heat capacity constant (H) is 56 (100), a measure of the lite's ability to absorb solar energy. An explanation for the use of these values and the calculations that follow can be found in Reference **(31)**. Determine the shear movement percent (%) for the structural joint using Eq 9, Eq 10, and Eq 11 as follows.

30.3.3.8 The expected summer surface temperature (T_s) of the lite is determined using Eq 9.

$$T_s = T_a + H(A) \tag{9}$$

substituting:

$T_s = 33 + 56(0.83) = 80°C$ $\quad$ $T_s = 92 + 100(0.83) = 175°F$

30.3.3.9 The glass lite is cut to size in a shop setting that is at a temperature of 21°C (70°F). The expected thermal movement (ΔT_s) of the lite when it warms from that temperature to T_s would be 59°C (105°F) and when it cools from that temperature to T_w the thermal movement (ΔT_w) would be 37°C (67°F). The differential thermal movement between the glass lite and the metal framing system is not considered for this

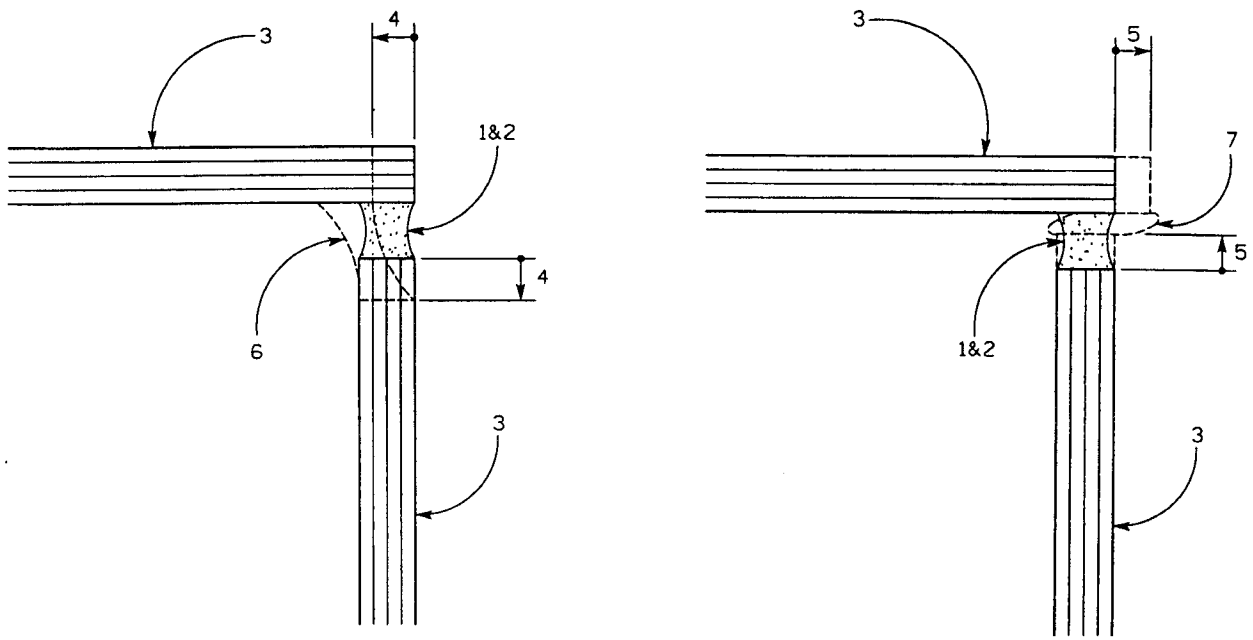

(a) Contraction of Glass Lites or Panels Due to Decreasing Temperature

(b) Expansion of Glass Lites or Panels Due to Increasing Temperature

LEGEND

(1) Weather Seal
(2) Structural Sealant
(3) Glass Lite or Panel
(4) Movement Caused by Decreasing Temperature
(5) Movement Caused by Increasing Temperature
(6) Sealant in Extension
(7) Sealant in Compression

FIG. 12 Effects of Thermal Movement at a Typical Structural Sealant Joint at a Vertical Corner

example. If it were, the thermal movement of the metal framing system would lessen the ΔT_s and ΔT_w values previously determined. The larger value, ΔT_s would represent the worst condition and that value would be used with Eq 10 to determine the thermal movement ΔL as follows.

$$\Delta L = L(\Delta T_s)(\alpha) \tag{10}$$

substituting:

$\Delta L = 2.44(1000)(59)(0.0000088) = 1.27$ mm

$\Delta L = 8(12)(105)(0.0000049) = 0.05$ in.

30.3.3.10 A right triangle with ΔL forming one leg and T the other is formed. The hypotenuse is the stretched length of the structural sealant. To determine the percent of shear movement (%), Eq 11 is used as follows.

$$\% = \left(\frac{\sqrt{(\Delta L)^2 + T^2} - T}{T}\right) 100 \tag{11}$$

substituting:

$$\% = \left(\frac{\sqrt{(1.27)^2 + (6.35)^2} - 6.35}{6.35}\right) 100 = 2$$

AND

$$\% = \left(\frac{\sqrt{(0.05)^2 + (0.25)^2} - 0.25}{0.25}\right) 100 = 2$$

30.3.3.11 The determined percent shear movement is then used to consult the shear modulus graph as previously described.

30.3.4 *Seismic Movement*:

30.3.4.1 *General*—A structural engineer should be retained who is experienced in seismic design for curtain walls, windows, and other SSG systems. Based on a structural analysis of the building code, or system performance requirements for seismic event movement, or both, a judgement can be made to determine the method of accommodation to use for a particular SSG application. In general, there are two methods: accommodate the expected movement in the structural sealant joint between a lite or panel and its framing system or use a flexible anchorage system between a subframe, which has a lite(s) or panel(s) attached to it, and a metal framing system or the building frame to which the subframe is attached.

30.3.4.2 *Small to Moderate Seismic Movement*—For this condition, accommodating movement in the structural sealant joint can be considered. Testing has been performed that indicates that a structural sealant joint can tolerate a seismic drift ratio of about 1/140 for a medium-modulus and about 1/175 for a high-modulus structural sealant. For a moment-resisting building frame with a 1/50 seismic drift ratio, a small or moderate seismic movement could be expected to be accommodated, however a significant seismic event would not (**3**). In this instance, the structural sealant joint not only would be designed to resist the required seismic movement, but also would have to resist, but not necessarily simultaneously, the applied lateral load, and any other secondary movements or loads required by a particular SSG system's performance criteria.

30.3.4.3 *Significant Seismic Movement*—A subframe with flexible mechanical attachment has been found by testing to be a strong factor in successfully resisting movement caused by a significant seismic event (**3**). A shop-glazed subframe is attached mechanically to a metal framing system or the building frame using a flexible anchorage system that permits simultaneous vertical and horizontal seismic movement between the subframe and its support. For the testing indicated in the reference, differential movement for 25 cycles of motion at approximately 60 mm (2.4 in.) was resisted without any distress to the SSG system. Failure of the structural sealant for this testing occurred when the differential movement reached 107 mm (4.2 in.).

30.3.5 *Fatigue*—Structural sealant joints are exposed to many cycles of loads that are considerably less then the design load for the joint. These loads can be a result of the almost constantly changing local wind conditions and the varying force they exert on a SSG system. SSG systems on tall structures experience forces caused by stack effect, which, in combination with varying HVAC system pressures, also can expose the structural joints to repeated cycles of load. One sealant manufacturer has conducted a testing program to determine the effects of these repeatedly applied small loads. The testing indicated, at least for one structural sealant, that it could accommodate one million fatigue cycles at a loading of 0.32 times the maximum design load (**40**). Prudent design and safety considerations would indicate that if a cyclical fatigue load is anticipated that its load should be kept to a significantly lesser value, typically about 0.05 times the design load.

30.3.6 *Others*—The following, depending on the SSG system type and configuration, are acknowledged to occur and are difficult if not impossible to calculate their effects on a structural sealant joint.

30.3.6.1 *Fabrication Induced*—Occasionally, loads are induced in a structural sealant joint when the components of the system are assembled into a finished product. A glass lite may have a bow, warp, wave or kink induced by a heat-strengthening process, particularly for a large glass lite. A panel may have a bow or warp induced during its manufacturing process. In a shop-glazing situation, where a unitized frame is assembled horizontally, weight typically is applied to a glass lite or panel to hold it in position while the structural sealant is installed and until it cures sufficiently to permit removal of the weight and crating and shipping of the unit. After sealant cure, the removal of the weight allows the glass lite or panel to attempt to return to its shape prior to assembly on the frame. This can induce a load into the structural sealant joint that is difficult to predict or calculate. Presently, unless circumstances indicate otherwise, this effect usually is accommodated by the design factor for the structural sealant.

30.3.6.2 *Differential Building Movement*—As time progresses after construction of a building differential movement can occur between a building's structural frame and a curtain wall, window or other SSG system. This movement and its effects usually are only a concern if provisions for this movement are not designed and provided adequately for a SSG system.

31. Weatherseal Joint Design

31.1 Proper design of nonstructural weather sealant joints in a SSG system is important to the successful performance and durability of the system. An analysis and calculation to

determine the required joint width dimension should be performed based on sealant characteristics and applicable performance factors. Information to assist in the design of these joints for thermal movement and other performance factors, such as, construction tolerances and building movements can be found in Ref (**31**).

31.2 Weather sealant joint design also must consider the adhesion and compatibility of the weather sealant with the structural and other sealants used in a SSG system. As indicated in Section 25, adhesion, and in some cases lack of adhesion, and compatibility of the structural and weather sealants that contact each other must be confirmed, so that the weather seal joint design will be durable and functional.

TESTING CONSIDERATIONS

32. General

32.1 The development of a SSG system inevitably requires that testing be performed at various stages in a system's implementation. Typically, these tests involve the establishment of performance criteria for a SSG system, as well as, verification of various material and component adhesion and compatibility characteristics relative to the structural and other sealants by use of various performance standards. During SSG system fabrication and installation further testing is performed to monitor the quality and consistency of the work. Lastly, after completion of the work, a periodic monitoring program for a SSG system typically will have testing requirements as part of the program (**1**). The following sections will briefly describe testing typically performed to establish or verify system performance criteria, the properties and characteristics of various system components, testing that typically occurs during fabrication and installation, and post-installation testing as part of a monitoring program.

33. Performance Criteria Testing

33.1 *Scale Model Testing*—To establish adequately some performance criteria that are necessary for the design of a SSG system, scale model testing should be performed before the design of the building has been finalized. Scale model testing can identify, among others, wind and snow loads to be resisted by a SSG system; areas on the building where unusual wind patterns generate unexpected conditions; the dynamic response of a building's framing system to wind loads; and, characteristics of the wind flow at pedestrian areas, such as entrances, plazas, and balconies. The results of the testing may influence the building configuration and also a SSG system. Performance factors that commonly are included in a scale model testing program are described in the following sections.

33.1.1 *Cladding Wind Load Tests*—A boundary layer wind tunnel (BLWT) is used to establish the wind flow characteristics around an instrumented rigid scale model of the building and its surrounding structures (**2, 42**). Testing in a BLWT will identify the magnitude and location of negative wind pressures that usually are not adequately described by a building code or ANSI/ASCE 7, especially for nonrectangular shaped buildings, buildings with aerodynamic characteristics, sloped walls, and building roof and corner areas. Meteorological data is obtained from a local weather station to establish the characteristics of the wind environment where the building will be located. This data along with a wind speed profile and ground surface roughness, among others, is used to establish the characteristics of the wind environment to be used for the testing. Various wind directions, in 10° increments to complete a 360° clockwise circle from true north, are sampled then to determine wind pressure. After data processing and analysis a test report is issued that will indicate the expected wind loads a building cladding system is expected to resist, typically for either a 50 or 100 year return period.

33.1.2 *Pedestrian Level Wind Patterns*—A BLWT is used to establish the characteristics of the wind flow pattern at pedestrian level areas of a building complex, to determine the level of comfort that can be expected for activities, such as sitting, standing, and walking. The testing results may indicate that the building configuration, and thus a SSG system, may have to be altered to make the local wind environment more acceptable for a particular activity.

33.1.3 *Snow Load (Accumulation)*—If a cladding system has sloped or horizontal surfaces, a scale model of the building should be tested in a device, such as a water flume, to establish the pattern and character of any snow accumulation and drifting that may occur on those surfaces. A water flume simulates snow fall and accumulation using very fine sand dropped into a moving stream of water. The sand will accumulate on building surfaces as the water flows around and over the scale model in a manner very similar to an actual snow storm. Snow dead load and drifting can be substantial on sloped or horizontal surfaces, as well as the potential for sliding snow and ice, all of which can have a significant impact on a SSG system's design. Additionally, this testing also will identify areas where snow may be ingested into louvers.

33.1.4 *Structural Frame Response*—A BLWT is used to establish the wind induced dynamic responses of an aeroelastic scale model of a building. This testing assists in establishing characteristics that will be required for the building's main framing system, by indicating the magnitude of sway and torsional motion of a building's main framing system. The testing will indicate both in-plane and out-of-plane building racking motion and peak building deflections. This information is important for a SSG system since it will assist in the design of the system's joints that will need to accommodate these various movements.

33.1.5 *Other Testing Programs*—Scale model testing to determine exhaust stack gas emission flow characteristics and other similar air flow patterns for areas, such as intake and exhaust louvers, may need to be performed. The results from this testing can influence the design of a building and a SSG system, in particular, for the location of elements, such as louvers. The testing provides information so louvers and other elements can be designed and located to preclude an air quality problem for the building occupants.

34. Component Testing

34.1 *General*—Laboratory testing of SSG components is necessary to determine if components meet specified requirements, are compatible when in contact or close proximity with each other, and if sealants will or will not adhere to particular component surfaces. In general, these tests are performed more

than once. Initially, they are performed to screen and verify particular materials or components for potential use in a SSG application, usually with small scale laboratory testing of samples. This is important so that materials or components do not become part of a SSG system, and therefore, difficult or costly to change, after substantial system development. Later, during fabrication and installation, the materials and components are tested periodically to confirm that they still meet specified performance criteria and that no detrimental changes have occurred to them during manufacture. This fabrication and installation periodic testing is performed because, occasionally, a small scale sample tested in the laboratory for prequalification may differ detrimentally from a production manufactured material or component. The following sections briefly describe typical testing that is performed.

34.2 *Specification*— Testing should be performed to verify that a proposed material or component meets a referenced specification. For example, a rubber material or component stated to meet Specification C 864 should be proven as such. This testing can be performed by the component manufacturer, who is usually required to certify to that testing, or by an independent test laboratory. Specification verification testing usually is performed during the submittal stage of a system's development.

34.3 *Compatibility*— Materials or components that are in close proximity to or are touching the structural or nonstructural sealants of a SSG system should be tested for compatibility with the sealants using Test Method C 1087. This test is performed in the laboratory with prepared samples of substrate finishes, gaskets, and spacer materials, among others. Any color change of the sealant after testing, is sufficient criteria for rejection of the candidate material or finish for use in structural glazing. This test usually is performed to prequalify a material or component for use and then later, before fabrication or installation, to verify that its production run has the same characteristics. In general, for most materials, sealant manufacturers have extensive previous compatibility testing experience and usually can indicate if their sealant is compatible with a particular material; therefore, prequalification testing usually is not necessary unless the manufacturer does not have relevant data. Prior to system fabrication or installation, however, compatibility testing should be performed by the sealant manufacturer on actual production run samples to assist in identifying any change that could be detrimental to the adhesion characteristics of a structural sealant, among others.

34.4 *Adhesion*—Adhesion or lack of adhesion of a structural or nonstructural sealant to the surface of another material or component is determined using Test Method C 1135 for a structural sealant and either Test Method C 794 or Test Method C 719 for a nonstructural sealant. The adhesion of silicone sealants to clean, uncoated glass has proven to be tenacious, while adhesion to other surfaces, such as coated glass and anodized or organically coated aluminum, has proven to be variable. In general, for most materials, sealant manufacturers have extensive previous adhesion testing experience and usually can indicate if their sealant will or will not adhere to a particular material's surface; therefore, prequalification testing usually is not necessary unless the manufacturer does not have relevant data. Prior to fabrication or installation, however, adhesion or lack of adhesion testing should be performed by the sealant manufacturer on production run samples of those components. This should be followed by periodic verification testing conducted during fabrication or installation of the system. Performance of prequalification, prefabrication, and fabrication testing will assist in identifying substrate or workmanship changes that could be detrimental to adhesion of a structural sealant.

35. Assembly Testing

35.1 *General*—Before substantial fabrication of a SSG system, a full scale mock-up usually is constructed at a test laboratory. The mock-up will have various tests performed to verify that the SSG system design will meet specified performance and other criteria. A manufacturer's standard SSG system, which has been previously tested, does not necessarily have to be tested again, provided the system is unmodified and used as the manufacturer requires. Assembly mock-ups that are two and three stories tall and 6 to 9 m (20 to 30 ft) wide are not uncommon. The mock-up usually will have typical system details and conditions included for evaluation. Occasionally, a smaller scale mock-up, for instance the size of a glazed panel, may be necessary during SSG system development to test a specific condition, for example, a particular structural sealant joint design **(20)**. Additionally, for a unitized shop glazed system, testing of an assembled unit during the fabrication process also can be performed as part of a quality control program.

35.2 *Mock-up*—The benefits that can result from a mock-up laboratory test program are verification and improvement of a SSG system performance characteristics and the ability to identify and correct potential fabrication and erection problems before construction occurs on the building **(43)**. Any modifications or changes performed to complete the mock-up testing program successfully, must be documented adequately in writing and communicated to and implemented for the shop or construction-site fabrication and installation. Typically, as a minimum, the following testing is performed: air leakage or air infiltration by Test Method E 283, static water penetration by Test Method E 331, dynamic water penetration by AAMA Test Method 501.1, and structural adequacy by Test Method E 330. Other tests also can be performed, such as, air leakage using a temperature and pressure difference by Test Method E 1424; structural performance using cyclic static air pressure by Test Method E 1233; and, water penetration by cyclic static air pressure by Test Method E 547. Additional tests can be performed to evaluate the effects of seismic loading, thermal movement, thermal performance, condensation resistance, and sound transmission, among others. The mock-up, after assembly and prior to testing, can be evaluated aesthetically for different glass types, panel finishes, and colors, among others. The assembly of the mock-up also is the time to train supervisory staff in its erection procedures and to evaluate any difficulties that may be encountered during its installation. Prior to any testing being performed, at least one vision and spandrel lite of glass or other panel type should be deglazed from the mock-up and reinstalled using the predetermined SSG construction-site reglazing procedures. The mock-up then is

tested so that both as glazed and reglazed configurations can be evaluated.

35.3 *Unitized System*—During fabrication, as part of a quality control program, an assembled unit can be tested. This testing most typically is performed using the design wind load. For a particular SSG application, a statistically significant population is established for testing. For example, if there are 3000 unitized frames for an application, it may be determined that 1 out of every 100 should be tested. This testing typically is used as a final check of the assembled components before they are shipped to the construction-site. After the structural sealant has cured satisfactorily, a unitized frame is put on a device that will permit application of the full design wind load to the glass lites or panels in a negative direction tending to pull them off the frame. Methods that have been used include a chamber where air can be removed or supplied to duplicate the static design wind load. Usually, this is a chamber similar to that described in Test Method E 330. Another method is to apply weight on suitably protected glass lites or panels until the weight equals the design wind load. Typically, the applied load is held for a period of 1 min and then released. These methods are used only to identify any major fabrication deficiencies related to the structural glazing sealant. Additionally, these or other units, can be deglazed to confirm the adequacy of the structural sealant application, including cleaning, priming, multicomponent sealant mixing, and sealant filling of the joint opening, among others. While deglazed an adhesion test of the structural sealant to the framing system and glass lite or panel surfaces can be performed (see Appendix X2).

36. Fabrication and Installation

36.1 *Components*—A structural glazing sealant should have at least its curing and adhesion characteristics periodically checked during fabrication and installation. These tests should be preformed before use on each different lot of structural glazing sealant and periodically during the fabrication or installation process. For construction-site glazed systems, testing is performed on site, and with shop glazed systems, in the shop. For a single-component structural sealant, there are two informal tests (see Appendix X3 and Appendix X4) that can be performed to verify that it is within its shelf-life and has been stored at a proper temperature. To verify its adhesion characteristics, one or more of the tests described in Appendix X2 can be performed depending on the circumstances of fabrication or installation. For a multicomponent structural sealant, the mixing equipment must be maintained properly and have its mixing ratio and degree of component mixing verified repeatedly during the sealant application process (see Appendix X5 and Appendix X6). These tests evaluate the rate of cure of a multicomponent sealant and should be performed each time a new container of the base or activator component is placed on the pump and at each startup after an extended shut down, such as at a break and lunch. Components that are not mixed completely at the correct ratio may have significantly altered properties that could affect the structural sealant curing process, adhesion characteristics, and ultimate durability. As for a single-component sealant, adhesion characteristics can be verified by one or more of the tests described in Appendix X2, depending on the circumstances of fabrication or installation.

36.2 *Assembly*—After erection or installation of a SSG system on a building, testing can be performed to verify workmanship and system performance. To test for air infiltration, Test Method E 783 can be used, and for water penetration, Test Method E 1105 and AAMA Test Method 501.2 can be used. Frequently, as part of the installation process, periodic water infiltration testing by these methods is specified as a part of a continuing verification of the quality of an installation.

37. Post Installation

37.1 As part of a monitoring program, depending on SSG system characteristics, sealant adhesion can be monitored periodically to detect any changes that may have occurred since installation. Method A of Appendix X2 is used commonly where applicable. Another technique that has been used to verify adhesion, is to attach a pressure chamber to the SSG system exterior or interior surface, and respectively, evacuating or pressurizing the chamber simulate the negative pressure of the wind. The force generated will tend to pull or push the glass or panel outward, thereby stressing the structural sealant to a predetermined value. Recently, a test apparatus has been developed and used successfully to evaluate the adhesion characteristics of installed structural glazing sealants. This method utilizes a point load apparatus applied to the exterior surface of a wall to simulate the effect of a wind load. The testing data then is analyzed based on an acceptable probability of failure, finite element analysis of the structural sealant joint, and a statistical analysis of the data (**44**). Also, if air and water infiltration is of concern, then Test Methods E 783 for air and E 1105 and AAMA Test Method 501.2 for water, can be used to assist in determining the source of infiltration.

SHOP GLAZING CONSIDERATIONS

38. General

38.1 Early in a factory or shop-glazed SSG system's design and development, proper consideration should be given to, at least, storage conditions and length of glazed unit storage; the method of crating, moving, and transporting glazed units from the factory or shop to the construction-site; and, the method of connecting to and hoisting of the units to final position on the building. These items must be resolved successfully to ensure no undue movement or stress will occur to the glazed units, the structural sealant joint, or other system components, such as glass, after fabrication of the units.

38.2 Quality verification during shop glazing begins with the arrival of the components that will comprise the SSG system. The gaskets, sealants, cleaners, surface conditioners, spacers, setting blocks, and the many other components must be those that are originally specified, tested, and approved for use. Any proposed substitutions cannot be implemented until they also have passed the required testing and other performance criteria verification.

38.3 Structural glazing sealant adhesion and compatibility should be tested repeatedly during the shop glazing process. Substrate finish and accessory component variability makes continued testing of those components for adhesion and compatibility essential; therefore, every new lot of metal and glass, as well as gaskets and other components, must be tested

to determine their acceptability for use with the structural glazing sealant. The success of a SSG system is dependent upon the continued testing and other verifications that are part of a quality assurance program specifically designed for each project. Briefly, all components should be verified as to their appropriateness prior to any final shop glazing for the SSG system. During shop glazing these materials also need to be stored properly, and each new lot or batch of a material or a new shipment of a particular component also should have the same quality verification checks performed prior to shop glazing. Ongoing checks and verifications during shop glazing have in the past identified and corrected problem situations that would have otherwise been incorporated into the fabrication of a SSG system with potentially detrimental effects. The following sections briefly describe some of the testing and verifications that should be part of a SSG system quality assurance manual.

39. Material Qualification

39.1 *General*—Each component of a SSG system should have verification performed to determine that the quality of the component fulfills the requirements of the project specification and is appropriate for use in a SSG application. A component is verified for a wide range of properties, such as size, shape, dimensions, material, finish, shelf-life, storage conditions, and color, among others.

39.2 *Sealants*:

39.2.1 *Single-Component Sealant*—A single-component sealant approved for a SSG application typically has a shelf-life of 6 or 12 months, depending on the particular sealant, when stored at temperatures below 27°C (80°F). Storage conditions can affect the shelf-life of a sealant, and therefore, structural sealant quality verification should be performed before use and throughout its application period. See 36.1 for an explanation of testing that typically is performed to verify single-component sealant acceptability.

39.2.2 *Multicomponent Sealant*—Verification of shelf-life for a multicomponent sealant is equally important as for a single-component sealant. For a multicomponent sealant, shelf-life can affect the ability of the sealant to cure and also the viscosity of the sealant components. Changes in viscosity can affect the ability of the dispensing apparatus to pump the components and the ultimate quality of the cured sealant. See 36.1 for an explanation of testing that typically is performed to verify multicomponent sealant acceptability.

39.2.3 *Sealant Adhesion Verification*—Substrate finish cleaning, and, if required, surface conditioner preparations that are required to achieve the desired structural sealant adhesion will have been determined by the sealant manufacturer prior to shop glazing of the SSG system. During shop glazing, adhesion performance of the sealant, substrate finish, and surface preparation combination should be verified repeatedly. See 36.1 for an explanation of adhesion testing that typically is performed to verify shop glazing procedures and component acceptability.

39.3 *Cleaning Materials*:

39.3.1 *Cloths*—Prior to structural sealant, and, if required, surface conditioner application, substrates should be cleaned using only clean, white, lint-free, cotton cloths or paper wipes. Do not use any cloth or wipe that has been chemically-treated. Substrate finish adhesion surfaces should be cleaned using the two wipe method. The first cloth or wipe is wetted with the cleaning solution. This cleaning is done by either pouring or using a squeeze bottle to apply the cleaning solution to the wipe. Do not dip the wipe into the cleaning solution. By doing so, contamination of the solution can result if the cloth or wipe is wetted a number of times. Using the wetted cloth or wipe, apply the cleaning solution to the surface, and with the other hand, immediately follow the wetted wipe with a second dry cloth or wipe. The first cloth wets the surface and removes some of the surface contaminants, while the second wipe removes the remaining cleaning solution and any contaminant residue. This procedure should be repeated until the second wipe shows no discoloration or evidence of any contaminant residue pickup from the substrate finish being cleaned. The cloths or wipes should be discarded frequently and replaced with new. Soiled wipes should never be in contact with the cleaning solution container. The cleaned surface must now be protected from becoming contaminated, for example, by being touched or handled by workman with dirty hands.

39.3.2 *Solutions*—Cleaning solutions only should be those approved by the sealant manufacturer for a particular application. See 24.4.1 for a discussion of the various cleaners that commonly are used for a SSG application. Each new lot, batch, or container of a cleaning solution should have its quality verified by an independent testing laboratory prior to its use. Typically, the laboratory should check for organic and other contaminants and that the solution meets its referenced specification. Cleaning solutions commonly are hazardous materials and must be handled in accordance with applicable regulations and personal health considerations.

39.4 *Surface Conditioner*:

39.4.1 *General*—Substrate finish surface preparation for structural sealant adhesion often will include the application of a surface conditioner or primer to develop the required sealant adhesion. See 24.4.2 for a discussion on surface conditioners. Additionally, sealant installers should be aware of the appearance of a primer to insure that a good quality primer is being used. The sealant manufacturer should provide information at least on the following surface conditioner or primer characteristics.

39.4.2 *Color*—It is not uncommon for primers to be various shades of pink, red, or yellow, as well as water white. The acceptable color and its range should be established by the sealant manufacturer, and primers that do not conform should be discarded and replaced. A questionable color primer should never be used.

39.4.3 *Clarity*—Clarity often is confused with color. A clear primer is free of particulate matter or settling and is not cloudy. A primer may be water-white or various colors, such as pink, red, yellow or some other color, and also will be clear. The need for and degree of clarity and the acceptability of solid material in a primer should be established by the sealant manufacturer. A questionable clarity primer should never be used.

39.4.4 *Application Rate*—For primer application, it is important that the instructions of the sealant manufacturer be understood and followed as written. Most primers are designed

to be applied as a relatively thin film that completely covers the adhesion surface. A dripping or running application or one with skips and voids is not recommended and can result in deficient adhesion of the structural sealant. The proper dispensing of a primer is important to avoid primer contamination. The most commonly encountered technique of pouring a primer into an open cup or bowl is the least desired technique. Almost all sealant manufacturers indicate that the primer should be applied from a closed container, for example a squeeze bottle, to a cloth or brush. The cloth or brush should not be dipped into a container of primer; repeatedly doing so can contaminate the primer. Some primers, depending on the type of substrate, are brush applied, wiped on with a cloth, or wiped on with one cloth and wiped off with another. It is important that those who are applying a primer be supplied the proper equipment to contain, dispense, and apply a primer, and not just with written instructions. The primed surface must now be protected from becoming contaminated, for example, by being touched or handled by workman with dirty hands.

39.4.5 *Dry Time*—Different primers require different lengths of time between primer application and sealant installation. If a primer does not have adequate dry time, undesirable adhesion quality may result. Primers normally require a period of time to dry before sealant application, and there usually is a maximum time interval between primer application and sealant application, which the sealant manufacturer can supply.

39.5 *Metal Framing System*:

39.5.1 *Components*—Metal framing components should be checked for size, shape, straightness, and for the correct finish of the proper quality without scratches, gouges, and other surface or finish imperfections.

39.5.2 *Finishes*—Prior to fabrication, the metal components should be check to verify that the appropriate coating has been applied to the structural sealant adhesion surface. See Section 21 for a discussion of commonly used finishes. The coating or finish should cover the adhesion surface completely and not have any obvious deficiencies, should be of uniform consistency, and should be free from scratches. As described in 34.4, adhesion of the structural sealant to the finish should again be verified prior to shop glazing.

39.6 *Organic Components*—Preformed components, such as gaskets, spacers, and setting blocks, can be checked to determine that they are the correct material, size, shape, are not deformed or misshapen, and that they have been fabricated properly. For example, an improperly sized or misshapen spacer, that is used to establish the structural sealant joint opening, could create an opening that falls outside of the allowable tolerance range for the joint opening, thereby resulting in a structural sealant joint that may be undersized. Additionally, they also should be checked to determine that they will attach to or fit into or with other system components, such as the metal framing. Occasionally, it is found that what was designed and anticipated for the system cannot be properly installed during fabrication, requiring a modification or change.

39.7 *Glass*:

39.7.1 *General*—Glass products should be checked to determine that they are the correct size and type for the particular application. Cut edges of the glass should be clean and free from impact damage and cutting defects, such as deep shark teeth, deep serration hackle, spalls, and flake chips. Using glass with questionable edge characteristics may result in a premature glass failure and the necessity for replacement. Breakage of glass products during transportation and system fabrication and erection is common. Extra or spare glass products should be anticipated and provided, perhaps as much as 10 to 15 % of that required for the application.

39.7.2 *Opacifier Edge Deletion*—Verify that the edge deletion of an applied opacifier plastic film or a silicone based paint coating (see 22.4) has been performed properly by the glass fabricator at the perimeter of the glass where structural sealant adhesion will occur. Structural sealant adhesion should occur to the glass face and not to the opacifier.

39.7.3 *Insulating Glass*—The IG unit edge seal should be of a dual seal construction with a polyisobutylene (PIB) primary seal and a structural silicone secondary seal. Verify that the IG unit edge seal secondary seal (structural sealant) has the required contact width. Sometimes the application of the edge seal structural silicone by the IG unit fabricator can overflow the edge and be on the surface of the glass or present an obstruction to its proper installation. The excess sealant material may have to be removed to permit its installation onto the framing system and the proper application of the structural sealant adhering it to the framing system.

39.8 *Stone*—Before use, the stone adhesion surface that is to receive the structural sealant has to be verified as clean. The adhesion surface should be inspected for dust, sludge, or other contaminants remaining from the stone cutting operation and stone shipment. All contaminants must be removed properly using procedures and solutions agreed to by the structural sealant manufacturer and stone fabricator.

40. Glazing

40.1 *General*—Some SSG applications have glass and panels structurally glazed to the framing system in a controlled factory or shop environment. Others are glazed at the construction-site, which is a far less controllable location. These different working situations and environments will require testing and quality control programs specifically developed for those situations. Also, some SSG systems only should be glazed in a factory or shop environment. The following briefly describes fabrication and glazing considerations for factory or shop glazing.

40.2 *Factory or Shop*:

40.2.1 *General*—Fabrication of components and glazing of glass or panels in a shop or factory situation is recommended for a four-side SSG system. A factory or shop can be arranged to provide optimum access for performing the work and to provide good visual verification and inspection access. Suitable quality control for substrate cleaning, priming, and application of the structural sealant, as well as the fabrication of other components only is obtainable in a shop or factory environment. With most four-side SSG systems, there is no supplemental mechanical or other support provided for the glass or panels. Adhesion of the structural glazing sealant is the sole means of glass or panel retainage. To achieve the specified adhesion, these systems should have the structural glazing sealant applied primarily in this environmentally controlled

setting. Construction-site structural glazing of four-side SSG systems should be limited to glass replacement due to breakage or maintenance. In addition to obtaining better quality control, since all components are fabricated in a controlled environment, glazing in a shop or factory may result in a more economical system. With this glazing method, it may be possible to limit construction-site application of sealant only to the weather sealant. In fact, some unitized factory glazed SSG systems have been developed that have no field applied sealants to the exterior face of the window or curtain wall system; therefore, when the unitized frames are set into place on the building, the interior is resistant immediately to the weather permitting early start of interior finish work. A properly designed four-wide SSG system can be easier and less expensive to reglaze than a construction-site glazed system.

40.2.2 *Sealants*—Factory or shop glazing also permits the use of either a single-component or multicomponent structural sealant (see 24.2). Using a single-component sealant avoids the mixing ratio and cleaning and maintenance considerations that accompany the multicomponent sealant mixing apparatus; however, a multicomponent sealant provides relatively rapid cure times allowing less storage area and quicker transport of the units to the construction-site. To avoid movement to the structural sealant joint during sealant cure, a glazed unit should not be moved in the factory or shop or transported to the construction-site until the structural sealant has developed sufficient strength. In this respect, a multicomponent sealant usually is more appropriate since it cures faster than a single-component structural sealant, thereby minimizing the storage period. A single-component sealant (especially the fast cure type), however, can be used if there is adequate storage space in the factory or shop to store the completed units until sufficient cure of the structural sealant.

40.2.3 *Sealant Application*—Shop or factory glazing generally is performed with the glazing unit lying horizontally on a glazing table. Often, it is desirable to have the structural sealant joint opening facing the outside perimeter of the unit so that structural sealant application can be performed comfortably from around the outside perimeter of the unit. For a multicomponent structural sealant this is important as the hoses of the sealant pumping equipment can restrict the movement of the applicator gun. Also, with the structural sealant joint opening facing outward, with glass lites or panels laid on top of the horizontal unit, the sealant applicator usually can observe visually the sealant filling the joint opening through the glass, provided any glass coatings do not restrict vision through the glass, or the joint opening, and hence, insure complete sealant filling of the joint opening. Masking tape often is applied to prevent excess structural sealant, as it is applied and tooled in-place, from contacting adjacent surfaces. The tape should be removed as soon as tooling is finished.

41. Installation

41.1 A factory or shop-glazed SSG system installation typically is limited to attachment to the building framing system of the premanufactured units. Storage and attachment of the unitized assemblies should be planned ahead of installation and conducted in a manner that will not cause unplanned stress or damage to the premanufactured units, especially the structural sealant joints. Some systems, however, shop glaze a glazing adaptor to the surface of a glass lite or panel, usually an aluminum extrusion, which then is attached mechanically to a curtain wall or window framing system that has been installed previously at a construction-site. The important distinction for factory or shop glazing is that the structural sealant work occurs in an environmentally-controlled factory or shop setting. Occasionally during construction, a glass lite is broken or a panel is damaged, which usually will require construction-site glazing to correct. Weatherseals and other nonstructural sealant joints in the SSG system should be installed following the recommendations in Guide C 1193.

42. Quality Control Program

42.1 The fabrication of the system and its components should be governed by a written quality control program whose verification also is documented with written data forms and other forms of documentation. The program should be specifically designed for the particular SSG application. Included in the program should be at least the material qualification testing described previously (see Section 34), as well as reviews and checks to be performed at predetermined intervals or at important steps in the fabrication and installation process. For example, in a shop glazed application, a self-adhesive label can be attached to the metal framing; and, as various operations are completed, they can be documented by checking the appropriate prelisted box on the label. Fabrication inspection, monitoring, and testing is essential to assure compliance with the quality control program workmanship procedures and the specified quality and compatibility of the materials and components. A good quality control program can identify and prevent detrimental variations in workmanship, as well as for material and component production runs and batches. Where applicable, periodic load tests on assembled units also should be conducted (see 34.3). A systematic and quantifiable program, such as this, only is as good as the accuracy of the record keeping. Quality control program documents and records should be stored for future reference after completion of the work. This storage of records is important if a concern develops in the future, for these records could prove invaluable in resolving a problem situation. Independent inspection and testing agencies are available to perform the inspection, monitoring, and testing services required by a quality control program.

CONSTRUCTION-SITE GLAZING CONSIDERATIONS

43. General

43.1 Quality verification during construction-site glazing begins with the arrival of the components that will comprise the SSG system. The gaskets, sealants, cleaners, surface conditioners, spacers, setting blocks, and the many other components must be those that are originally specified, tested, and approved for use. Any proposed substitutions cannot be implemented until they also have passed the required testing and other performance criteria verification. Structural-glazing sealant adhesion and compatibility should be tested repeatedly during the construction-site glazing process. Substrate finish and accessory component variability makes continued testing

of those components for adhesion and compatibility essential. Every new lot of metal and glass, as well as gaskets and other components, therefore, must be stored properly at the construction-site and tested to determine their acceptability for use with the structural glazing sealant. The success of a SSG system is dependent upon the continued testing and other verifications that are part of a quality assurance program specifically designed for each project. Briefly, all components should be verified as to their appropriateness prior to any final construction-site glazing for the SSG system. During construction-site glazing, these materials also need to be stored properly and each new lot or batch of a material or a new shipment of a particular component also should have the same quality verification checks performed prior to construction-site glazing. Ongoing checks and verifications during construction-site glazing, in the past, have identified and corrected problem situations that otherwise would have been incorporated into the fabrication of a SSG system with potentially detrimental effects. The following sections briefly describe some of the testing and verifications that should be part of a SSG system quality assurance manual.

44. Material Qualification

44.1 *General*—Each component of a SSG system should have verification performed to determine that the quality of the component fulfills the requirements of the project specification and is appropriate for use in a SSG application. A component is verified for a wide range of properties, such as size, shape, dimensions, material, finish, self-life, storage conditions, and color, among others.

44.2 *Sealants*:

44.2.1 *Single-Component Sealant*—A single-component sealant approved for a SSG application typically has a shelf-life of 6 or 12 months, depending on the particular sealant, when stored at temperatures below 27°C (80°F). Storage conditions can affect the shelf-life of a sealant, and therefore, structural sealant quality verification should be performed before use and throughout its application period. See 36.1 for an explanation of testing that typically is performed to verify single-component sealant acceptability.

44.2.2 *Multicomponent Sealant*—Currently, a multicomponent structural sealant is not available for construction-site glazing. The dispensing apparatus to mix and pump the sealant components is large and bulky and not suited for use at a construction-site.

44.2.3 *Sealant Adhesion Verification*—Substrate finish cleaning, and, if required, surface conditioner preparations that are required to achieve the desired structural sealant adhesion will have been determined by the sealant manufacturer prior to construction-site glazing of the SSG system. During construction-site glazing, adhesion performance of the sealant, substrate finish, and surface preparation combination should be verified repeatedly. See 39.1 for an explanation of adhesion testing that typically is performed to verify construction-site glazing procedures and component acceptability.

44.3 *Cleaning Materials*—Cloths, solutions, and methods utilized for substrate cleaning are the same as those used for factory or shop glazing (see 39.3).

44.4 *Surface Conditioner*—Surface conditioner properties, characteristics, and methods utilized for substrate finish conditioning are the same as those used for factory or shop glazing (see 39.4).

44.5 *Metal Framing System*:

44.5.1 *Components*—Metal framing components should be checked for size, shape, straightness, and for the correct finish of the proper quality without scratches, gouges, and other surface or finish imperfections.

44.5.2 *Finishes*—Prior to fabrication the metal components should be checked to verify that the appropriate coating has been applied to the structural sealant adhesion surface. See Section 21 for a discussion of commonly used finishes. The coating or finish should cover the adhesion surface completely and not have any obvious deficiencies, should be of uniform consistency, and should be free from scratches. As described in 34.4, adhesion of the structural sealant to the finish should again be verified prior to construction-site glazing. Verification at the construction-site of structural sealant adhesion to the finish surface, in the past, has discovered manufacturing variations that have occurred between small samples prepared for laboratory testing and the production runs of material shipped to the construction-site.

44.6 *Organic Components*—Preformed component properties and characteristics are the same as those used for factory or shop glazing (see 39.6).

44.7 *Glass*—Structural sealant glazing considerations relative to glass products are similar to those described for factory or shop glazing (see 39.7).

44.8 *Stone*—Before use, the stone adhesion surface that is to receive the structural sealant has to be verified as clean. The adhesion surface should be inspected for dust, sludge, or other contaminants remaining from the stone cutting operation and stone shipment. All contaminants must be removed properly using procedures and solutions agreed to by the structural sealant manufacturer and stone fabricator.

45. Glazing

45.1 *General*—Construction-site glazing has all substrate cleaning, priming, and structural sealant application occurring in a basically uncontrolled environment. This environment can present many situations beyond the control of the sealant applicator that can be detrimental to proper structural sealant application procedures. The construction-site can be exposed to unpredictable weather patterns including rain and snow; it can be dusty and wind blown; and, other trades can contribute inadvertently to sealant application problems. Because of these and other concerns, workmanship and quality control become particularly important. This working situation and environment will require a testing and quality control program specifically developed for construction-site glazing. The quality control program, as a minimum, must include sufficient training and meaningful supervision of qualified structural sealant applicators, as well as periodic testing (see Section 36). Also, some SSG systems, in particular a four-side system, should not be glazed in a construction-site environment except for breakage replacement or other maintenance considerations. Glass, panel and organic components, and the structural sealant must be stored and used properly at the construction-site. The following briefly describes fabrication and glazing considerations for

construction-site glazing.

45.2 *Construction-Site*:

45.2.1 *General*—Most two-side SSG systems are designed and fabricated for construction-site glazing. SSG systems designed for construction-site glazing should have all fabrication of components performed in a shop or factory environment. This should include at least framing member finish application and all cutting to size, punching, and drilling of those members. The individual components should be crated or packaged properly for shipment to the construction site for installation on the building. The framing members should arrive at the construction site properly cleaned of all finishing process residue and fabrication process cutting aids and other detrimental elements that could affect structural sealant adhesion. For four-side SSG systems, suitable quality control for substrate cleaning, priming, and application of the structural sealant, as well as the fabrication of other components only is obtainable in an environmentally controlled setting, and therefore, they should not be glazed at the construction site.

45.2.2 *Sealants*—Construction-site glazing requires the use of a single-component structural sealant (see 24.2). The structural sealant should be stored at the construction site below its maximum storage temperature, which generally is 27°C (80°F).

45.2.3 *Sealant Application*—Construction-site glazing generally is performed with the glass lite or panel inserted into the installed framing system. The structural sealant can be installed from either the exterior of the building or from the interior. If the structural sealant joint opening is facing the outside perimeter of the glass lite or panel, the structural sealant application can be performed from the exterior around the outside perimeter of the unit. With the structural sealant joint opening facing outward, and with glass lites, the sealant applicator usually can visually observe the sealant filling the joint opening through the glass, provided any glass coatings do not restrict vision through the glass, or the joint opening, and hence, insure complete sealant filling of the joint opening. Exterior glazing of the structural sealant will require scaffolding, swing-stage platforms, or other means of access to the face of multistory buildings. If the structural sealant joint opening is facing the inside perimeter of the glass lite or panel, all structural glazing operations can take place from the floor of the building; however, exterior applied weather seals will still require the use of scaffolding, swing-stage platforms, or other means of access.

45.2.4 *Temporary Support Devices*—A structural sealant does not develop its adhesive and cohesive strengths immediately after application. Generally, a device, called a dutchman, must be applied to a construction-site glazed system to retain glass or panels in place while the sealant is curing. Dutchman must be sized appropriately, stiff enough to resist displacement, and applied often to prevent the glass or panels from experiencing detrimental movement. Typically, a dutchman can be made from a wood block, plastic clip, or an aluminum extrusion with gaskets, which are either screw-applied or interlock into the metal framing system.

45.2.5 *Construction-Site Conditions*—It cannot be expressed enough that the success of a construction-site glazed SSG system will be a direct function of the ability of the installers and sealant applicators to respond to the unpredictable or uncontrollable conditions that can occur. Rain, wind blown dust, heat, cold, trade interferences, and other conditions or effects can cause or contribute to inadequate structural sealant adhesion. The employment of qualified sealant applicators and implementation of a quality control program are the best methods for obtaining reliable adhesion.

46. Installation

46.1 Construction-site installation of a SSG system requires a planned program of monitoring, inspection, and testing. This is necessary to assure the acceptability of other work that is in-place and that will receive the SSG work and to determine compliance with specified material, fabrication, and erection tolerances. In addition, inspection of SSG system materials, components, and assemblies for specified quality and configuration and for damage from shipping, handling, and storage is necessary. Since the structural sealant joint is applied at the construction-site, labor may be more intensive and costly. Also, it may be necessary to install sealant in two operations, a structural sealant joint and then a weather seal. A construction-site glazed SSG system, however, can be more tolerant of dimensional variations that can occur during installation. Construction-site SSG work will require more and, in some instances, different quality control methods and procedures. Weatherseals and other nonstructural sealant joints in the SSG system should be installed following the recommendations in Guide C 1193.

47. Quality Control Program

47.1 The construction-site installation of the SSG system and its components should be governed by a written quality control program whose verification also is documented with written data forms and other forms of documentation. The program should be designed specifically for a construction-site SSG application. Included in the program should be at least the material qualification testing previously described (see Section 34), as well as reviews and checks to be performed at important steps in the installation process. Construction-site fabrication and installation inspection, monitoring, and testing is essential to assure compliance with the quality control program workmanship procedures and the specified quality and compatibility of the materials and components. A good quality control program can identify and prevent detrimental variations in workmanship, as well as for material and component production runs and batches. Where applicable, periodic workmanship verification tests on installed portions of the system also should be conducted (see Section 36). A systematic and quantifiable program, such as this, only is as good as the accuracy of the record keeping. Quality control program documents and records should be stored for future reference after completion of the work. This storage of records is important if a concern develops in the future, or these records could prove invaluable in resolving a problem situation. Independent inspection and testing agencies are available to perform the inspection, monitoring, and testing services required by a quality control program.

POST INSTALLATION CONSIDERATIONS

48. General

48.1 A building owner's need and ability to maintain and monitor a SSG application should be considered. Because of potential safety concerns, and in an effort to obtain increased durability, a post-installation inspection and maintenance program is desirable. This program should be anticipated and included in the design of the SSG system. Window washing, maintenance, and system monitoring programs should be developed realistically so that work platforms on a multistory building face do not cause or create problems for the SSG system. Work, which will be performed due to glass breakage, seal failure of insulating glass units, and eventual replacement of materials that have reached their life expectancy, should be planned for during SSG system design, rather than later, when better or more economical options may not be available. Adequate access with well designed equipment is important, particularly if structural sealant joints have to be replaced in-situ. System maintenance and monitoring requires a planned program, which may influence the SSG system design.

48.2 The design of a SSG system must take into consideration the need to replace glass or panels due to failure and the need to repair or replace structural and weather seals when they fail or are no longer able to meet specified performance criteria. Typically, failure modes for installed SSG systems are glass breakage, insulating glass seal failure, and intermittent or complete structural or weather seal sealant adhesion failure around a glass lite or panel. Also, due to natural aging, there may be a reduction in structural sealant strength or deflection characteristics below specified performance requirements, even though the structural sealant has no evidence of a failure in adhesion or cohesion. Presently, there is no standardized test procedure to determine if a reduction in structural sealant properties will occur. The present state of the art is that an aged structural sealant specimen can be removed periodically from an SSG system and sent to the sealant manufacturer for evaluation. Specimen removal can occur sporadically during normal system maintenance, for example, when replacing broken glass, or can be part of a formal periodic system monitoring program. By comparing the aged specimen properties with the known but unaged properties of the structural sealant, a determination of the degree of change in properties can be made. This data then can become part of a service-life evaluation program for the structural sealant. These potential maintenance possibilities should be planned for in advance to facilitate repairs or replacement when needed.

49. Maintenance

49.1 *Cleaning*—Regular cleaning of a SSG system exterior surface is prudent. Cleaning will assist in controlling the accumulation of environmental pollutants on the SSG system, which can cause permanent disfiguration of glass and other surfaces. Cleaning also will control potential accumulation of materials on the surface of a weather sealant, thereby changing its color or causing or contributing to staining of other materials. Glass cleaning should not damage the glass or sealant and metal components. The glass manufacturer's cleaning requirements should be followed to prevent damage. If the SSG system has operable windows, periodic maintenance will be required for the window gasket seals and operating hardware. Other building systems that interface with the SSG system also should be monitored and maintained so they do not cause or contribute to deterioration of the SSG system, for example, by allowing water to infiltrate.

49.2 *Glass Failure*—Usually it is obvious when a vision area glass lite breaks or an IG unit has a seal failure. Frequently, it is not obvious when the same occurs at a spandrel or nonvision area. During routine maintenance or cleaning of the exterior SSG system surface, the staff should be instructed to document and report to the building maintenance office those areas where glass failures have occurred. Any failed glass should be replaced immediately. To facilitate replacement, many large building owners store extra material or "attic stock" at the building site. Typically, when the system is being designed, the quantities of extra material are established so they can be provided with the original glass order. This is important, for it is not uncommon for a glass type to become unavailable in the future, which may result in a color or reflectivity matching problem or a change in summer solar or winter insulating performance. This is particularly important for those glass products that have reflective or low-emissivity coatings.

49.3 *Sealant Failure*— For a structural sealant joint that is visible, a cohesive sealant failure usually is more detectable than an adhesive failure; however, for some SSG system designs, if not most, a structural sealant cohesive failure or lack of initial adhesion is not readily obvious and usually is hidden from view. A visible nonintrusive inspection, although useful and the most economical investigative procedure, may not be adequate. During routine maintenance or cleaning of the exterior SSG system surface, the staff should be instructed to document and report to the building maintenance office those areas where visible weather and structural sealant joint failures have occurred. Any failed sealant, for either a structural or weather seal, should be replaced immediately. It also should be realized that there is no assurance that the initial strength and deflection characteristics of a structural sealant will remain within the established performance criteria range as the application ages; therefore, it should be anticipated that at some time in the future there could be a reduction in structural sealant capacity below its initial performance requirements. Clearly, if this does occur, the structural sealant joints should be replaced or strengthened before an unsafe situation could develop.

49.4 *Repair and Replacement*:

49.4.1 The primary goal of a SSG system, from both an application and performance view, is to attain a "zero defect" product and installation; however, there may be a time after installation when a glass lite or panel will have to be replaced (**45**). It is good practice, therefore, to design two-side and four-side SSG systems for ease of glass, panel, or sealant replacement. Also, it is a rare construction site that does not require repair or remedial work at some time during SSG system installation. Glass can be damaged or broken, aluminum framing members or finishes damaged, and IG units may need replacement. For example, if an insulating glass unit has

seal failure, the unit should be investigated and replaced promptly. A seal failure could be the precursor of a loss of adhesion and subsequent loss of the unit or part of the unit from the framing system. Remedial work should be anticipated, and provisions included during the design of the system, to permit the performance of the work in a planned manner.

49.4.2 A thorough inspection and analysis should be conducted to determine the cause of a glass lite failure. It is prudent to do so to avoid a failure repetition. Consulting with the structural sealant and glass manufacturers to determine cause and appropriate replacement often is of benefit. Reglazing should commence only after the failure mechanism has been determined to the satisfaction of all involved parties. Generally, for remedial glazing work, at least the following determinations should be made prior to performing any work: the remedial work structural sealant compatibility with the original structural sealant; the replacement spacers, gaskets, and setting blocks compatibility with the remedial work structural sealant; the structural sealant joint of adequate size for the lateral and other load requirements; the cleaning method, cleaning solution, and, if required, primer required; the provisions or room for the attachment of temporary retainers; and, the length of the structural sealant curing period before removal of retainers.

49.4.3 Glass lite replacement should follow the glass and sealant manufacturers recommendations. Provision should be made for at least proper glass support, adequate glass edge clearance, and proper structural sealant joint dimensions. During glass replacement, the old structural sealant must be removed form both the metal and the glass without damaging either substrate surface or finish. The sealant manufacturer should be contacted for cleaning and priming requirements prior to reglazing.

49.4.4 Construction-site replacement of a glass lite or panel and the structural sealant requires the use of temporary glass or panel supports for the term of the structural sealant curing period. To accommodate reglazing, attachment provisions for the temporary supports should be part of a SSG system design. If not planned for, uncontrolled drilling or framing members to attach the temporary supports, for example, may alter the system's water infiltration performance. Also, it should be realized that removal of sealant from an adjacent glass edge that is not to be replaced may cause damage to that glass edge, or if an IG unit, to the edge seal. Additionally, structural and other sealant removal also could damage a glass coating or metal framing finish. Some SSG systems are designed to provide a projecting metal fin that separates adjacent structurally-glazed glass lites or panels from each other, thereby eliminating this workmanship concern.

49.4.5 A factory or shop glazed unit, depending on its design, may not easily accommodate glass or panel replacement at the construction-site, and conceivably, could require removal to the shop for reglazing or resealing. For such a shop glazed unit, it would be advantageous for the owner to have extra material or "attic stock" stored and available for emergency replacement. In one regard, this is an advantage since reglazing can occur in the shop and construction-site replacement can be made with another factory or shop glazed unit taken from storage. In any event, it is good practice to design factory or shop glazed SSG systems to be maintained easily at the construction-site or the finished building.

49.4.6 For SSG systems that are originally glazed using either a single-component or multicomponent structural sealant, a different single-component structural sealant may be necessary for maintenance work. A multicomponent structural sealant is unavailable for construction-site reglazing, and the original single-component structural sealant may no longer be available. The remedial work structural sealant should have its strength, deflection characteristics, and other properties evaluated and found to be compatible with the original structural sealant design factor, as well as other established performance criteria.

50. Periodic Monitoring Program

50.1 *Program Development*—Post-construction monitoring of a SSG system is necessary to ensure long-term performance and durability. The following briefly describes some recommended monitoring schedule and other information for building owners to use when developing their specific monitoring program. The SSG system should receive a 100 % inspection upon completion. This will establish system condition for subsequent monitoring work. The inspection also will assist in identifying remaining punch list items that should be corrected before close out of the construction phase. Periodic inspections should occur for the life of the SSG system. A reasonable inspection sequence would be at six months, one year, and then yearly for the first five year period. Based on the inspection findings, changes to the sequence, and subsequent inspections and intervals, can be established. The local building code authority may have facade inspection regulations that will have to be fulfilled periodically, and usually a written report or certification of the inspection submitted. Accurate records of the inspections should be maintained. After completion of construction, a written monitoring program for the silicone structural glazing system should be considered. It may be helpful, considering the type and complexity of the system, code mandated inspection periods, and other system factors, to retain a statistician to assist in establishing a program on a statistical basis. The program can identify areas to be inspected at each inspection interval and the degree of inspection at those areas.

50.2 *Monitoring Agency*—The inspection agency should be an organization that is familiar with SSG design, construction, and inspection. A qualified registered design professional, such as an architect or engineer should be responsible for the inspection. If a consultant is retained for the SSG system design and development, that consultant should be considered for the continuing monitoring work.

50.3 *Inspection Items*—Monitoring work will require more than just looking at the exterior surface of the SSG system. Typically, an inspection should include, at least, adhesion testing of structural and weather seal sealants, verifying that weep holes are functional, observation of the condition of spandrel and other panels, condition of organic coatings on metal surfaces, verification that sealant joints are functional and not failing due to movement or other concerns, and the monitoring of other items specific to the particular SSG

system. Any moisture found in or on the SSG system should be investigated since the source, among others, could be a failed weather sealant, condensation, or a failed structural sealant. These, among other aspects, should be inspected periodically to identify problematic areas and to assure the continued performance of the components as time progresses.

50.4 *Testing*—When a visual inspection is not adequate, testing is the only positive means of identifying a deficiency and any resultant repair or replacement that may be necessary. Testing can be performed for many different aspects of the SSG system, for example, water and air infiltration and structural sealant joint performance (see Section 37). Most presently available structural sealant joint in-situ adhesion test methods are destructive (see Appendix X2). If necessary, representative factory or shop-glazed units can be removed from the face of the building for load testing, if they have been designed to be removable. In lieu of removal, a nondestructive test can be performed (see Section 37).

51. Quality Control Program

51.1 During the post-installation phase of a SSG systems service life, periodic maintenance and system monitoring should occur and be performed only from a written quality control program. This program is best developed by those responsible for the SSG system design, fabrication, and installation. The specifications for a SSG application, should include a requirement that a SSG system manual be prepared, specific to this particular application, for the owners use when the building is occupied. This manual should at least document the specific identification of the materials and various components that are used, the results of all the testing performed on the materials, components and assemblies, a copy of all submittals and drawings for the system, and each manufacturer's maintenance and replacement instructions for their particular material, product, or assembly. For example, if a glass lite or panel is to be replaced in situ, written quality control procedures should address, among others, temporary opening closure, glass or panel removal, substrate cleaning, transportation and installation of a new glass lite or panel, installation of the structural sealant, provision of temporary supports, until the sealant has cured, and subsequent installation of the weather seal. Additionally, it should include a schedule outlining what should be inspected, at what interval, and to what degree. These written requirements and procedures should establish the appropriate methods and include adequate safe guards so that a quality inspection will be the result. Every inspection should be documented thoroughly and the records stored for future reference, should a problem develop. Quality control is not only necessary during a SSG system fabrication and installation, but also, more importantly, for maintenance and repair or remedial work, which often is performed in less than desirable environmental and working conditions.

52.

53. Keywords

53.1 construction-site glazing; curtain wall; glazing; shop glazing; silicone sealant; structural sealant; structural sealant glazing; SSG

APPENDIXES

(Nonmandatory Information)

X1. GENERAL INDEX TO TOPICS AND HEADINGS AS LISTED IN THE GUIDEPrecision and Bias

X1.1 Index

1 Scope

2 Referenced Documents
2.1 *ASTM Standards.*
2.2 *Aluminum Association Manual.*
2.3 *American Society of Civil Engineers (ASCE) Standard.*
2.4 *Architectural Aluminum Manufacturers Association (AAMA) Standard.*
2.5 *Institute of Electrical and Electronics Engineers, Inc. and ASTM Standard.*

3 Terminology
3.1 *Definitions.*
3.2 *Descriptions of Terms Specific to This Standard:*
3.2.1 *aspect ratio (AR).*
3.2.2 *bite.*
3.2.3 *construction-site glazing.*
3.2.4 *durability.*
3.2.5 *durability limit.*
3.2.6 *negative pressure.*
3.2.7 *opacifier.*
3.2.8 *positive pressure.*
3.2.9 *premature deterioration.*
3.2.10 *service life.*
3.2.11 *shop glazing.*
3.2.12 *snap time.*
3.2.13 *stick system.*
3.2.14 *thermal bridge.*
3.2.15 *thickness.*
3.2.16 *unitized system.*
3.3 *Symbols.*

4 Summary of Guide
4.1 *General.*
4.2 *Predesign Considerations*
4.3 *Performance Criteria Considerations.*
4.4 *System Design Considerations*
4.5 *Component Design Considerations.*
4.6 *Structural Sealant Design Considerations.*

4.7 *Testing Considerations.*
4.8 *Shop Glazing Considerations.*
4.9 *Construction-Site Glazing Considerations.*
4.10 *Post-Installation Considerations.*

5 Significance and Use

PREDESIGN CONSIDERATIONS

6 Roles of Major Participants
6.1 *General*
6.2 *Building Owner*
6.3 *Architect*
6.4 *Consultant*
6.5 *Building Code Authority*
6.6 *Contractor*
6.7 *SSG System Designer*
6.8 *SSG System Subcontractor*
6.9 *Metal Framing Fabricator or Supplier*
6.10 *Glass Manufacturer or Fabricator*
6.11 *Structural Sealant Manufacturer*
6.12 *Accessory Material Suppliers*

PERFORMANCE CRITERIA CONSIDERATIONS

7 General

8 Structural Loads
8.1 *Dead.*
8.2 *Wind.*
8.3 *Snow.*
8.4 *Live (Maintenance).*
8.5 *Seismic.*
8.6 *Missile Impact.*

9 Movements
9.1 *Building Motion.*
9.2 *Thermal Movement.*
9.3 *Live Load.*
9.4 *Dead Load.*
9.5 *Framing Effects*
9.5.1 *Elastic Frame Deformation.*
9.5.2 *Creep.*
9.5.3 *Shrinkage.*
9.6 *Seismic.*

10 Construction Tolerances
10.1 *General.*
10.2 *Material.*
10.3 *Fabrication.*
10.4 *Erection.*

11 Weather Tightness
11.1 *General.*
11.2 *Air Infiltration or Exfiltration.*
11.3 *Water Infiltration.*
11.4 *Thermal Performance.*
11.4.1 *Condensation Resistance.*
11.4.2 *Thermal Transmittance.*

12 Sound Transmission

13 Fire Resistance

14 Durability
14.1 *History.*

SYSTEM DESIGN CONSIDERATIONS

15 General

16 Basic Systems
16.1 *General.*
16.2 *Two-side.*
16.3 *Four-side.*
16.4 *Others.*
16.5 *Sloped Glazing.*

17 Other Systems
17.1 *Butt Glazing.*
17.2 *Glass Mullion.*

18 Weatherproofing Concepts
18.1 *General.*
18.2 *Primary Seal.*
18.3 *Internal Drainage.*
18.4 *Pressure Equalization.*
18.5 *Combinations.*

COMPONENT DESIGN CONSIDERATIONS

19 General

20 Metal Framing Systems
20.1 *General.*
20.2 *Stick.*
20.3 *Unitized.*
20.4 *Preassembled.*

21 Metal Framing Finishes
21.1 *General.*
21.2 *Anodized Aluminum.*
21.3 *Organic Coating.*
21.4 *Chemical Conversion Coating.*
21.5 *Unfinished.*

22 Glass
22.1 *General.*
22.2 *Monolithic Glass.*
22.3 *Laminated Glass.*
22.4 *Spandrel Glass.*
22.5 *Insulating Glass.*
22.6 *Heat-Treated Glass.*
22.6.1 *General.*
22.6.2 *Heat-Strengthened Glass.*
22.6.3 *Fully Tempered Glass.*
22.7 *Chemically Strengthened Glass.*
22.8 *Coated Glass.*

22.8.1 *General.*
22.8.2 *Coating Processes.*
22.9 *Other Glass Products.*

23 Panels
23.1 *General*
23.2 *Metal*
23.3 *Composite*
23.4 *Natural Stone*

29.1.2 *Secondary Loads.*
29.2 *Edge of Lite or Panel*
29.2.1 *Primary Load.*
29.2.2 *Secondary Load.*
29.3 *Face of Lite or Panel.*
29.3.1 *Primary Load.*
29.3.2 *Secondary Load.*
29.4 *Edge and Face of Lite or Panel.*
29.4.1 *Primary Load.*

X6. TEST METHOD FOR SNAP-TIME OF MULTICOMPONENT SEALANTS

X6.1 Scope

X6.1.1 This test method determines whether the rate of cure of a mixed sealant sample is within the sealant manufacturer's written specifications.

X6.2 Apparatus

X6.2.1 *Paper Cup*—Small paper cup of approximately 180-mL (6-oz) capacity.

X6.2.2 *Spatula*—A wooden paint stirring stick, for example.

X6.2.3 *Sealant*—Material to be tested as extruded from the dispensing apparatus.

X6.3 Procedure

X6.3.1 Fill the cup approximately two-thirds to three-fourths full with sealant from the dispensing apparatus (Fig. X6.1a). Insert the spatula vertically into the center of the cup. Periodically attempt to remove the spatula from the sealant.

X6.4 Results

X6.4.1 If the sealant strings and does not tear within itself (cohesively) when the stick is pulled from the sealant, the sealant has not snapped (Fig. X6.1b). Continue periodic testing. The time, in minutes after filling the cup, at which the sealant does tear within itself, and does not string, is termed the snap time (Fig. X6.1c).

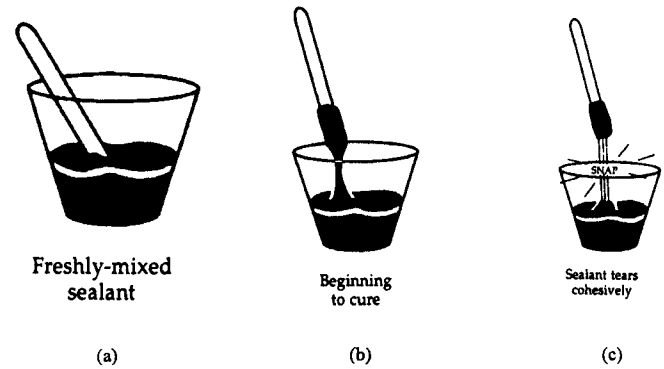

FIG. X6.1 Snap Time Test

X6.4.2 If the snap time is different from the sealant manufacturer's specified value for the particular sealant component mix ratio, contact the sealant manufacturer for guidance and inspect the dispensing equipment to determine the cause of the discrepancy, that is, sealant components out of shelf-life, equipment adjustment, or maintenance.

X6.5 Report

X6.5.1 File the snap time test number, snap time in minutes, date, sealant lot numbers, and other pertinent information in a QC document for future reference.

REFERENCES

(1) Council on Tall Buildings and Urban Habitat, *Cladding Monograph*, McGraw-Hill, Inc., 1992.

(2) *Design Wind Loads for Buildings and Boundary Layer Wind Tunnel Testing*, Aluminum Curtain Wall Series No. 11, American Architectural Manufacturers Association (AAMA), Schaumburg, IL, 1985.

(3) Zarghamee, M. S., Schwartz, T. A., and Gladstone, M., "Seismic Behavior of Structural Silicone Glazing," *Science and Technology of Building Seals, Sealants, Glazing, and Waterproofing, Sixth Volume, ASTM STP 1286*, ASTM 1996, pp. 46–59.

(4) Minor, J.E., "Windborne Debris and the Building Envelope," *Journal of Wind Engineering and Industrial Aerodynamics*, Vol 53, 1994, pp. 207–227.

(5) Behr, R.A., Minor, J.E., and Kremer, P.A., "Effects of Accelerated Weathering on Architectural Laminated Glass in a Windstorm Environment," *Science and Technology of Building Seals, Sealants, Glazing and Waterproofing: Sixth Volume, ASTM STP 1286*, ASTM, 1996, pp. 27–45.

(6) *Building Movements and Joints*, Portland Cement Association, Skokie, IL, 1982.

(7) Rainger, P., *Movement Control in the Fabric of Buildings*, Nichols Publishing Company, New York, NY, 1983.

(8) *Estimation of Thermal and Moisture Movements and Stresses: Part 2*, Building Research Establishment Digest 228, Building Research Station, Garston, Watford UK, 1979.

(9) Ballast, D.K., *Handbook of Construction Tolerances*, McGraw-Hill, Inc., New York, NY, 1994.

(10) Parise, C.J., and Spindler, R.G., "Structural Sealant Glazing in the 1980s," *Exterior Wall Systems: Glass and Concrete Technology, Design, and Construction, ASTM STP 1034*, ASTM, 1991.

(11) Schmidt, C.M., Schoenherr, W.J., Carbary, L.D., and Takish, M.S., "Performance Properties of Silicone Structural Adhesives," *Science and Technology of Glazing Systems, ASTM STP 1054*, ASTM 1989, pp. 22–45.

(12) Takish, M.S., Haugsby, M.H., Schmidt, C.M., and Schoenherr, W.J., "Structural Silicone Sealant Curtain Walls: Field or Factory Glazing," *Science and Technology of Glazing Systems, ASTM STP 1054*, ASTM, 1989, pp. 58–65.

(13) *Structural Design Guidelines for Aluminum Framed Skylights*, Skylight and Sloped Glazing Series, American Architectural Manufacturers Association (AAMA), Schaumburg, IL, 1989.

(14) *Sloped Glazing Guidelines*, TIR-A7-83, American Architectural Manufacturers Association (AAMA), Schaumburg, IL, 1983.

(15) *Glass Design for Sloped Glazing*, Skylight and Sloped Glazing Series No. 1, American Architectural Manufacturers Association (AAMA), Schaumburg, IL, 1987.

(16) *Two-Sided Structural Glazing Guidelines for Aluminum Framed Skylights*, AAMA Skylight and Sloped Glazing Series, American Architectural Manufacturers Association (AAMA), Schaumburg, IL, 1991.

(17) Anderson, J.M., and Gill, J.R., *Rainscreen Cladding a Guide to Design Principles and Practice*, Butterworths, Boston, MA, 1988.

(18) Clift, C.D., "Lateral Buckling of Structurally Glazed Curtain Wall Framing," *Science and Technology of Glazing Systems, ASTM STP 1054*, ASTM, 1989, pp. 73–84.

(19) Descamps, P., Iker, J., and Wolf, A.T., "Methods of Predicting the Adhesion of Silicone Sealants to Anodized Aluminum," *Science and*

Technology of Building Seals, Sealants, Glazing and Waterproofing: 3rd Vol, ASTM STP 1254, ASTM, 1994, pp. 95–106.

(20) O'Connor, T.F., and Panek, J.R., "Extended Laboratory Testing for Two Structural Glazing Silicone Sealants," *Science and Technology of Building Seals, Sealants, Glazing and Waterproofing ASTM STP 1200*, ASTM, 1992, pp. 1–9.

(21) *Structural Properties of Glass*, AAMA Aluminum Curtain Wall Series No. 12, American Architectural Manufacturers Association (AAMA), Schaumburg, IL, 1984.

(22) Bailey, J.R., Minor, J.E., and Tock, R.W.," Changes in the Seal Shapes of Structurally Glazed Insulating Glass Units," *Building Sealants: Materials, Properties, and Performance, ASTM STP 1069*, ASTM, 1990, pp. 42–52.

(23) Bailey, J.R., Minor, J.E., and Tock, R.W., "Response of Structurally Glazed Insulating Glass Units to Wind Pressures," *Journal of Wind Engineering and Industrial Aerodynamics*, Vol 36, 1990, pp. 1163–1171.

(24) Sandberg, L. B., and Carbary, T. M., "Spacer Geometry Effects on Strength of Insulating Glass Joints for Structural Glazing Applications," *Science and Technology of Glazing Systems, ASTM STP 1054*, ASTM, 1989, pp. 66–72.

(25) Carbary, L. D., "Structural Silicone Sealant Requirements for Attaching Stone Panels for Exterior Applications," *Building Sealants: Materials, Properties, and Performance, ASTM STP 1069*, ASTM, 1990, pp. 53–66.

(26) Carbary, L.D., and Fulton, J.R., "Structural Silicone Performance Testing on 2 CM Polished Granite," *Science and Technology of Building Seals, Sealants, Glazing, and Waterproofing, ASTM STP 1286*, ASTM, 1996, pp. 15–26.

(27) O'Brien, W.R. and Horschig, D.M., "Silicone Adhesives/Sealants in Curtain Wall Design," *Exterior Wall Systems: Glass and Concrete Technology, Design, and Construction, ASTM STP 1034*, ASTM, pp. 73–82.

(28) Gutowski, V.S., Lalas, P., and Cerra, A.P., "Structural Silicone in Curtain Walls," *Science and Technology of Building Seals, Sealants, Glazing and Waterproofing: Fifth Volume, ASTM STP 1271*, ASTM, 1996, pp. 97–112.

(29) Shisler, F.W., and Klosowski, J.M., "Sealant Stresses in Tension and Shear," *Building Sealants: Materials, Properties, and Performance, ASTM STP 1069*, ASTM 1990, pp. 95–107.

(30) Tock, R.W. and Keshavaraj, R., "Physical-Chemical Changes in Silicone Elastomers Used for Building Sealants," *Science and Technology of Building, Seals, Sealants, Glazing and Waterproofing: Fifth Volume, ASTM STP 1271*, ASTM 1996, pp. 113–125.

(31) O'Connor, T. F., "Recent Developments in the Design of Sealant Joints for Movement and Other Effects", *Science and Technology of Building Seals and Sealants: Fifth Volume, ASTM STP 1271*, ASTM, 1995, pp. 3–41.

(32) Cerra, A.P., and Gutowski, V.S., "Performance-Based Adhesion Testing of Structural Sealants," *Science and Technology of Building Seals, Sealants, Glazing and Waterproofing: Fifth Volume, ASTM STP 1271*, ASTM, 1996, pp. 209–225.

(33) Voytek, V.W.S., Russell, L., and Cerra, A., "Adhesion of Silicone Sealants to Organic-Coated Aluminum," *Science and Technology of Building Seals, Sealants, Glazing and Waterproofing: Second Volume, ASTM STP 1200*, ASTM, 1992, pp. 144–159.

(34) Sandberg, L.B., and Klosowski, J.M., "Structural Glazing: Behavior Details of Double-Bead Installations," *Adhesives Age*, May 1986, pp. 26–29.

(35) Vallabhan, C. V. G., and Chou, G. D., "Sealant Stresses in Structural Glazing: A Mathematical Model," *Building Sealants: Materials, Properties, and Performance," ASTM STP 1069*, ASTM, 1990, pp. 22–41.

(36) Sandberg, L. B., Chang, K., and DeClercq, M. A., "Stress Redistribution in Structural Glazing Joints," *Science and Technology of Building Seals, Sealants, Glazing, and Waterproofing, ASTM STP 1168*, C. J. Parise, Ed., ASTM 1992, pp. 106–116.

(37) Sandberg, L. B., and Tan, I. P., "A Load-Displacement Model for Structural Glazing Joints in Tension and Shear," *Science and Technology of Building Seals, Sealants, Glazing, and Waterproofing, ASTM STP 1168*, ASTM 1992, pp. 85–96.

(38) Sandberg, L. B., and Ahlborn, T.M., "Combined Stress Behavior of Structural Glazing Joints," *Journal of Structural Engineering*, Vol 115, No. 5, May 1989, American Association of Civil Engineers, pp. 1212–1224.

(39) Haugsby, M. H., Schoenherr, W. J., Carbary, L. D., and Schmidt, C. M., "Methods for Calculating Structural Silicone Sealant Joint Dimensions," *Science and Technology of Glazing Systems, ASTM STP 1054*, ASTM 1989, pp. 46–57.

(40) Sandberg, L. B., and Rintala, A. E., "Resistance of Structural Silicones to Creep Rupture and Fatigue," *Building Sealants: Materials, Properties, and Performance," ASTM STP 1069*, ASTM, 1990, pp. 7–21.

(41) Klosowski, J. M., and Wong, A.," Shear Component of a Structural Sealant Glazing Joint," *Science and Technology of Building Seals, Sealants, Glazing, and Waterproofing, ASTM STP 1168*, ASTM, 1992, pp. 97–105.

(42) Davenport, A.G., *Wind Tunnel Testing and Cladding Pressures*, Exterior Claddings on High-Rise Buildings, Symposium Proceedings, The Chicago Committee on High-Rise Buildings, 1989, pp. 87–121.

(43) Sakhnovsky, A.A., "Full-Scale Performance Testing of Curtain Walls," *Exterior Wall Systems: Glass and Concrete Technology, Design, and Construction, ASTM STP 1034*, ASTM 1991, pp. 47–58.

(44) Schwartz, T.A., Zarghamee, M.S., and Kan, F.W., "Structural Silicone Glazing: In-Service Reliability Evaluation," *Science and Technology of Building Seals, Sealants, Glazing and Waterproofing: Sixth Volume, ASTM STP 1286*, ASTM, 1996, pp. 3–14.

(45) Wilson, M.D., "In-Situ Reglazing of Structural Sealant Glazing Joints a Case History," *Science and Technology of Building Seals, Sealants, Glazing and Waterproofing, Fourth Volume, ASTM STP 1243*, ASTM, 1995, pp. 133–143.

The American Society for Testing and Materials takes no position respecting the validity of any patent rights asserted in connection with any item mentioned in this standard. Users of this standard are expressly advised that determination of the validity of any such patent rights, and the risk of infringement of such rights, are entirely their own responsibility.

This standard is subject to revision at any time by the responsible technical committee and must be reviewed every five years and if not revised, either reapproved or withdrawn. Your comments are invited either for revision of this standard or for additional standards and should be addressed to ASTM Headquarters. Your comments will receive careful consideration at a meeting of the responsible technical committee, which you may attend. If you feel that your comments have not received a fair hearing you should make your views known to the ASTM Committee on Standards, 100 Barr Harbor Drive, West Conshohocken, PA 19428.